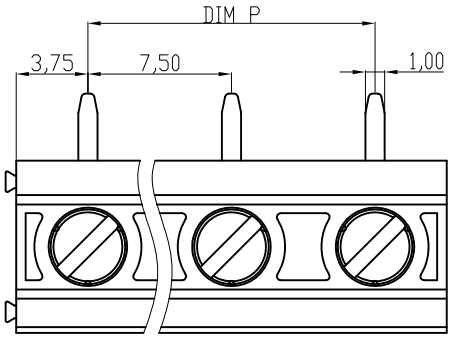

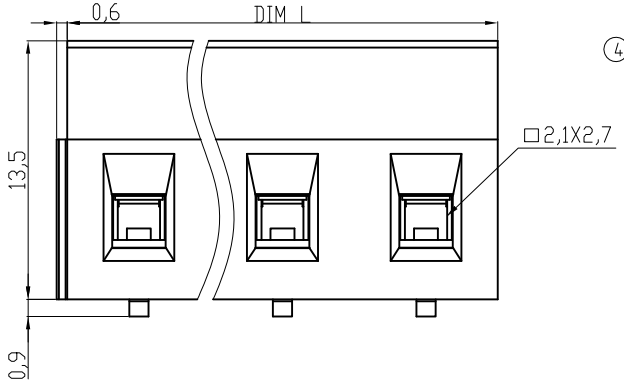

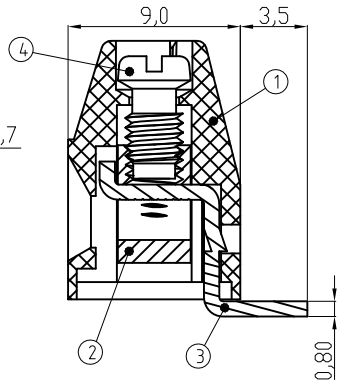

Material

①Terminal housing: Thermoplastic (UL94V-0) , GREEN
②Clamp: Brass,Ni plated
③Wire guard solder pin: Brass,Tin plated
④Terminal screw: Steel Zinc plating "-" slot type

Electrical cULus/FIMKO
Voltage rating:300VAC/300VAC
Current rating:16A/17.5A
Wire range: 1.5mm²
Solid wire(AWG):12-28
Stranded wire(AWG):12-28
Torque(Lb-In):3.5Lb-In/0.5 Nm
Screw: M3
Wire strip length:6-7mm
Withstanding Voltage: 1.6KV/2.5KV
Operating temperature: -40°C to +115°C
Soldering temperature: 250°C±10°C/5 Sec
Safety Approval:

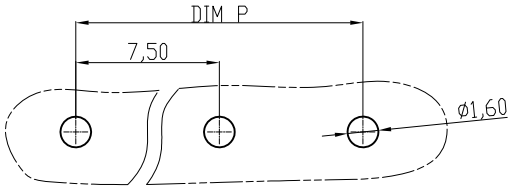

RECOMMENDER PCB LAYOUT

DIMENSION

L	Nx7.5
P	(N-1)x7.5

N=Number of poles

Poles	Tolerance
	DIM L&DIM P
2p-6p	±0.15
7p-12p	±0.25
13p-16p	±0.35

RoHS compliant

Scale	1:1
TOLERANCE	
X.	±0.50
X.X	±0.30
X.XX	±0.10
DIM	TOL
X.°	±1°
Angle	TOL

Id.	Modification	Date	Name
0	Drawn	19.04.2010	Alex

	Date	Name
Drawn	19.04.2010	Alex
Approved	19.04.2010	Hellwig

ASSMANN WSW components

Customer-No.

ASSMANN WSW-No.
A-TB750-VIxxV

Drawing-No.
ASS 4106 CO

rev00

Replace

Sheet