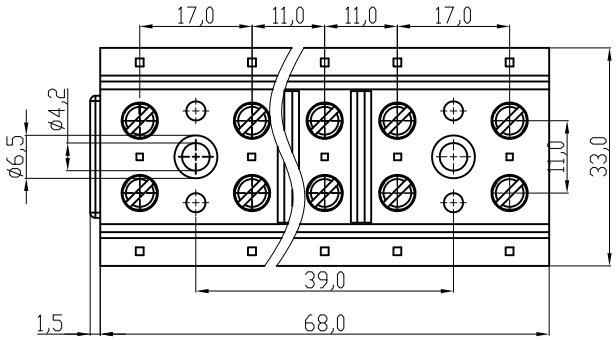

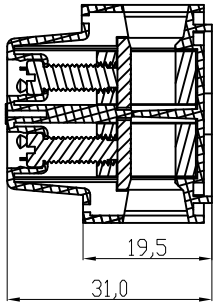

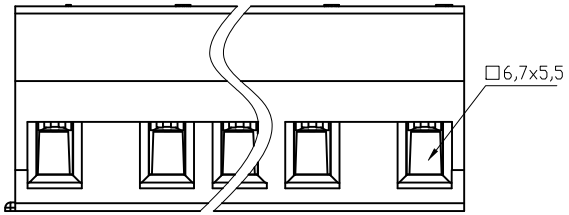

Material

①Clamp: Brass,Ni plated
②Terminal screw: Steel Zinc plating "-" slot type
③Wire guard solder pin: Brass,Tin plated
④Terminal housing: Thermoplastic (UL94V-0) , GREY

Electrical cULus

Voltage rating: 600V
Current rating: 65A
Wire range:
Solid wire(AWG): 6-22
Stranded wire(AWG): 6-22
Torque(Lb-In): 8.7Lb-In
Screw: M4
Wire strip length: 6-7mm
Withstanding Voltage: 2.2KV
Operating temperature: -40°C to +115°C
Soldering temperature: 250°C±10°C/5 Sec
Safety Approval: c us

RoHS compliant

Scale	1:1						Date	Name
TOLERANCE						Drawn	19.04.2010	Alex
X.	±0.50					Approved	19.04.2010	Hellwig
X.X	±0.30							
X.XX	±0.10							
DIM	TOL							
X.°	±1°							
		⓪	Drawn	19.04.2010	Alex			
Angle	TOL	Id.	Modification	Date	Name			

Customer-No.

ASSMANN WSW-No.
A-TB000-V4xx

Drawing-No.
ASS 4115 CO

rev00

Replace

Sheet

ASSMANN WSW components