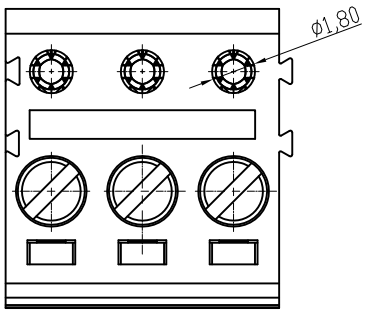

Material

Item a Clamp:: Brass(CuZn),Ni plated
Item b Terminal screw: Steel Zinc plating "-" slot type
Item c Female contact:PhBz,Tin plated
Item d Terminal (housing): Thermoplastic (UL94V-0) , GREEN

Electrical

Voltage rating: 300VAC
Current rating: 10A
Wire range:
Solid wire(AWG): 16-28
Stranded wire(AWG): 16-28
Torque(Lb-In): 1.7
Screw: M2
Wire strip length: 5-6mm
Withstanding Voltage: 1.6KV
Operating temperature: -40°C to +115°C
Soldering temperature: 250°C±10°C/5 Sec
Safety Approval: c us

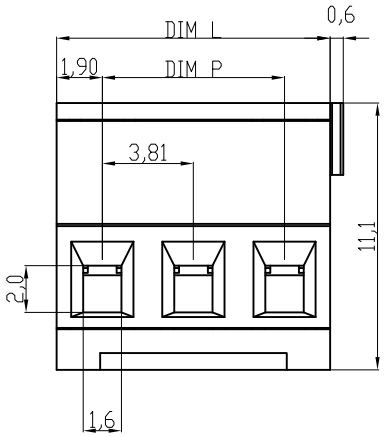

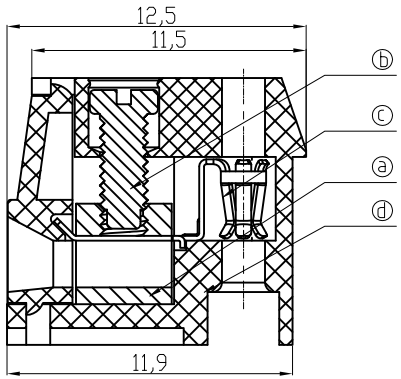

DIMENSION

L	Nx3.81
P	(N-1)x3.81

N=Number of poles

Poles	Tolerance	
	DIM L	DIM P
2p-6p	±0.15	±0.15
7p-12p	±0.20	±0.20
13p-18p	±0.30	±0.30
19p-24p	±0.40	±0.40

RoHS compliant

Scale	1:1
TOLERANCE	
X.	±0.50
X.X	±0.30
X.XX	±0.10
DIM	TOL
X.°	±1°
Angle	TOL

Id.	Modification	Date	Name
0	Drawn	19.04.2010	Alex

	Date	Name
Drawn	19.04.2010	Alex
Approved	19.04.2010	Hellwig

ASSMANN WSW components

Customer-No.

ASSMANN WSW-No.
A-TB381-TTxx

Drawing-No.
ASS 4117 CO

rev00

Replace

Sheet