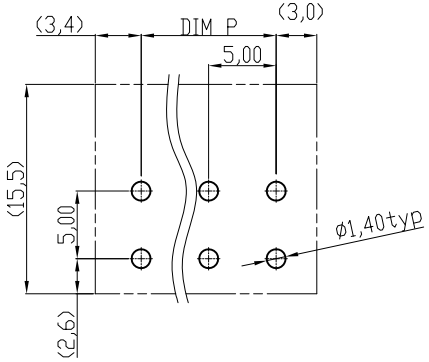

RECOMMENDER PCB LAYOUT

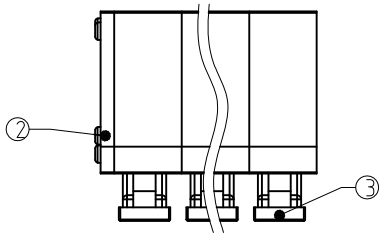

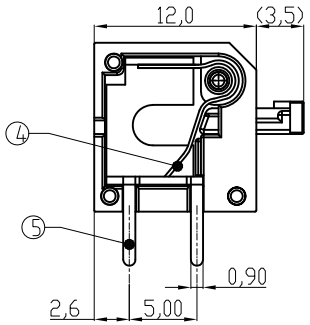

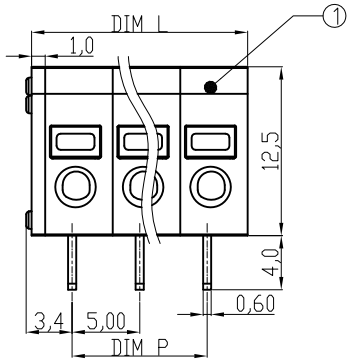

Material

①Insulating body:	Thermoplastic (UL94V-0),GREY
②Insulating cover:	Thermoplastic (UL94V-0),GREY
③Insulating lever:	Thermoplastic (UL94V-0),GREY
④Contact pin:	Brass,Tin plated
⑤Spring clamp:	Stainless steel

Electrical cULus

Voltage rating: 300V
Current rating: 6A
Wire range:
Solid wire(AWG): 16-26
Stranded wire(AWG): 16-26
Wire strip length: 6-7mm
Withstanding Voltage: 1.6KV
Operating temperature: -40°C to +115°C
Soldering temperature: 250°C±10°C/5 Sec
Safety Approval: c us

DIMENSION

L	Nx5.0+1.00
P	(N-1)x5.0

N=Number of poles

Poles	Tolerance	
	DIM L	DIM P
1p-4p	±0.15	±0.15
5p-9p	±0.20	±0.20
10p-14p	±0.30	±0.30
15p-19p	±0.40	±0.40
20p-24p	±0.50	±0.50

RoHS compliant

Scale	1:1
TOLERANCE	
X.	±0.50
X.X	±0.30
X.XX	±0.10
DIM	TOL
X.°	±1°
Angle	TOL

Id.	Modification	Date	Name
⓪	Drawn	19.04.2010	Alex

	Date	Name
Drawn	19.04.2010	Alex
Approved	19.04.2010	Hellwig

ASSMANN WSW components

Customer-No.

ASSMANN WSW-No.
A-TB500-HXxxH

Drawing-No.
ASS 4123 CO

rev00

Replace

Sheet