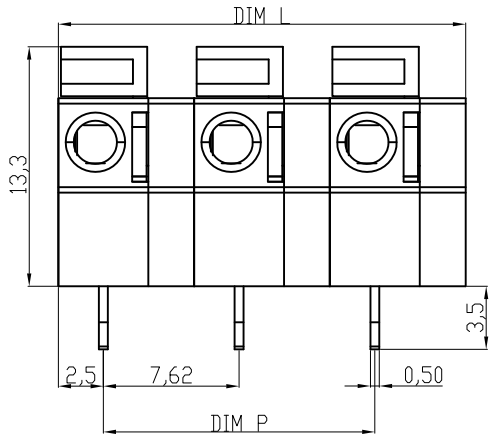

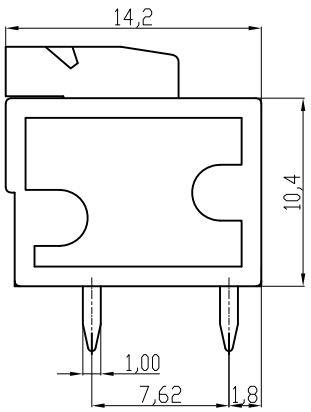

Material

①Terminal body(Contact pin):Brass
②Wire guard: Stainless steel
③Surface of solder tail: Tin plated
④Insulator(housing): Thermoplastic (UL94V-0) , GREEN

Electrical cULus/VDE

Voltage rating: 300VAC/450VAC
Current rating: 10A/10A
Wire range:0.75-1.5mm²
Solid wire(AWG): 14-24
Stranded wire(AWG): 14-24
Pull force:
Screw:
Wire strip length: 9-10mm
Withstanding Voltage: 1.6KV/2.5KV
Operating temperature: -40°C to +115°C
Soldering temperature: 250°C±10°C/5 Sec
Safety Approval: c us

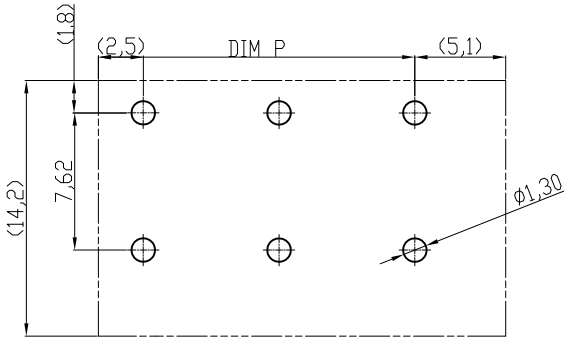

RECOMMENDER PCB LAYOUT

DIMENSION

L	Nx7.62
P	(N-1)x7.62

N=Number of poles

Poles	Tolerance	
	DIM L	DIM P
2p-6p	±0.15	±0.10
7p-12p	±0.20	±0.20
13p-18p	±0.30	±0.25
19p-24p	±0.40	±0.30

RoHS compliant

Scale	1:1
TOLERANCE	
X.	±0.50
X.X	±0.30
X.XX	±0.10
DIM	TOL
X.°	±1°
Angle	TOL

Id.	Modification	Date	Name
0	Drawn	19.04.2010	Alex

	Date	Name
Drawn	19.04.2010	Alex
Approved	19.04.2010	Hellwig

ASSMANN WSW components

Customer-No.

ASSMANN WSW-No.
A-TB762-HAxxH

Drawing-No.
ASS 4127 CO

rev00

Replace

Sheet