SHEET 1 OF 1

LED SPECS ▲	UNITS	BLUE
FORWARD CURRENT	mA	5
FORWARD VOLTAGE @20mA	V	2.9-4.0
LUMINOUS INTENSITY @ 20mA	MCD	150

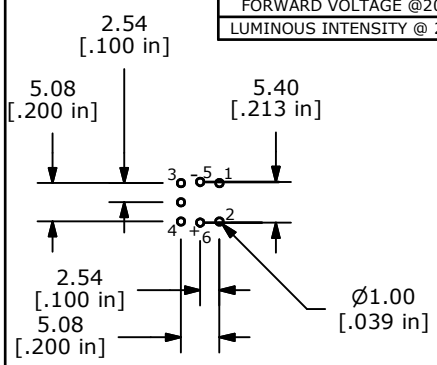

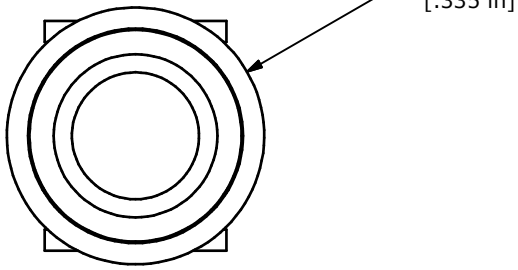

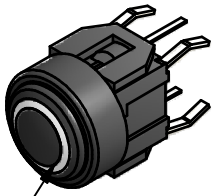

▲ HALO TRANSLUCIENT GRAPHIC

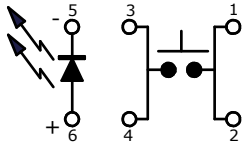

▲ BLUE LED
CIRCUIT: SPST

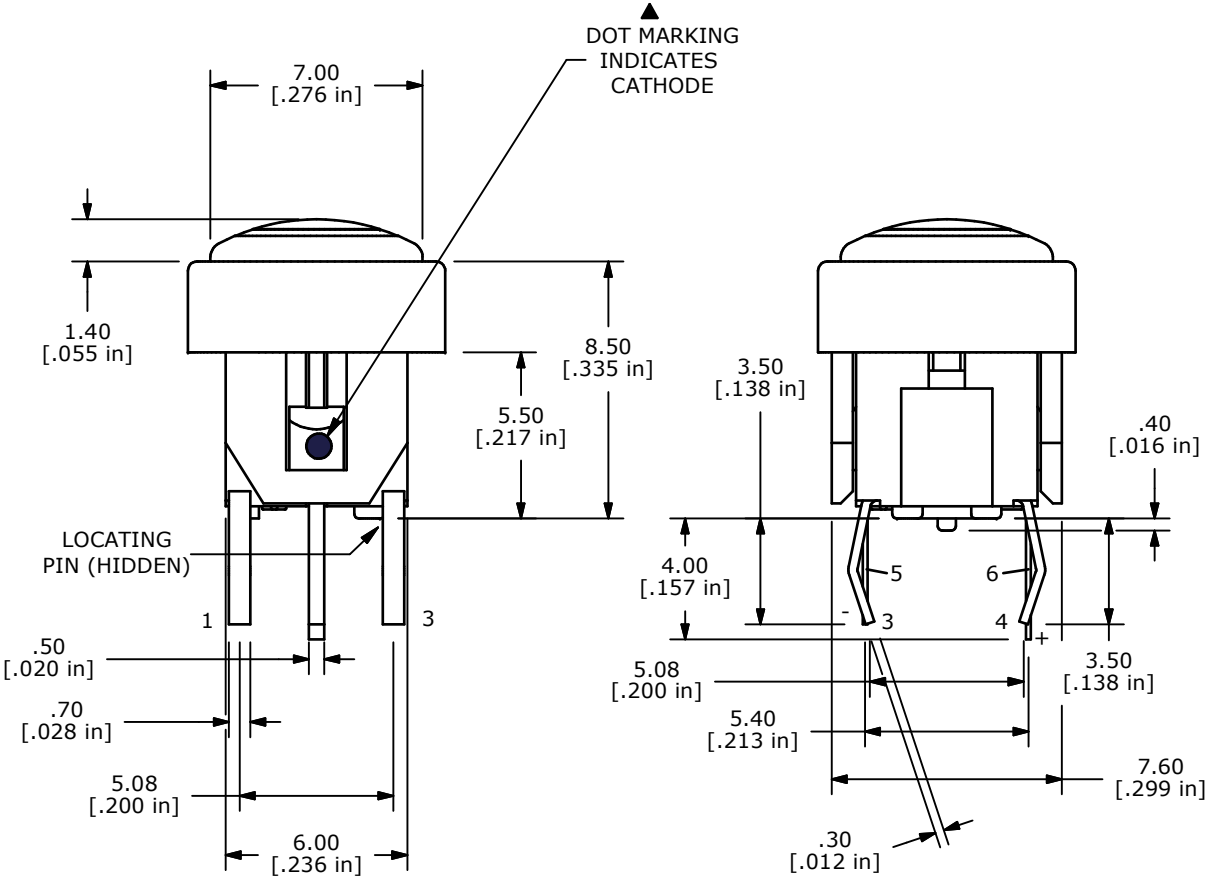

NOTES:
1. ALL DIMENSIONS IN MM [INCH]
2. GENERAL TOLERANCE: X.X=±0.4
   X.XX=±0.25
3. RATING: 12VDC @ 50mA
4. CONTACT RESISTANCE: 100mΩ MAX.
5. INSULATION RESISTANCE: 100MΩ MIN.
▲6. OPERATING FORCE: 180± 50gf
7. TRAVEL: 0.2± 0.1mm
8. OPERATING TEMPERATURE: -20˚C TO 70˚C
9. OPEREATING LIFE: 500,000 CYCLES
10. LED: BLUE
11. ▲ DENOTES CRITICAL PARAMETERS
12. 2002/95/EC (ROHS) COMPLIANT
13. PARTS TO BE PACKAGE 100 PARTS PER TRAY.

REV	PCR NO	DESCRIPTION	DATE	BY
A	18584	Release For Production	7/22/09	BLR

THE INFORMATION CONTAINED IN THIS DOCUMENT IS PROPRIETARY TO E-SWITCH AND IS NOT TO BE COPIED OR TRANSFERRED

E-SWITCH® | LAMB INDUSTRIES™

TITLE TL1220R1BBBBHALO

SCALE	DATE	DR	DWG	REV
4	7/22/2009	BLR	B260009	A