MICRO SWITCH
a Honeywell Division
FED. MFG. CODE 91929

SWITCH-ENCLOSED

CATALOG LISTING
BFR1-BP1

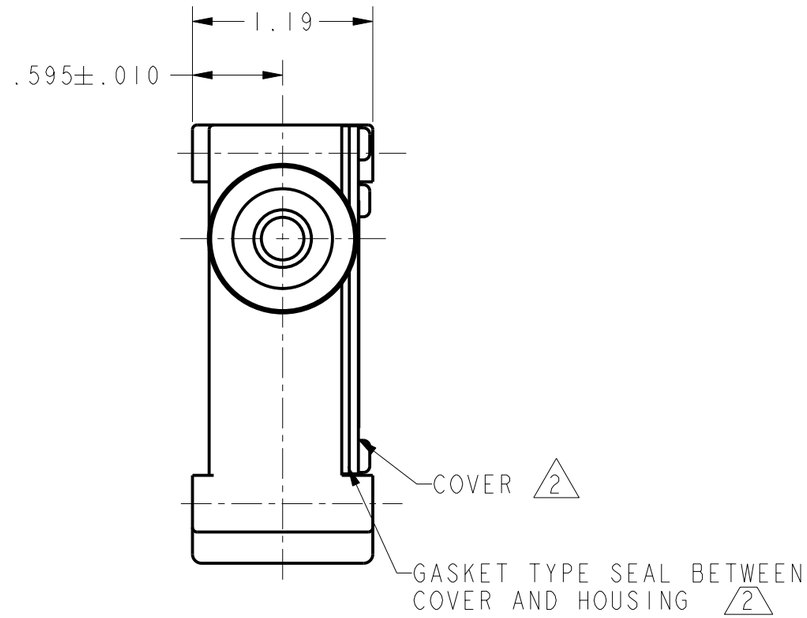

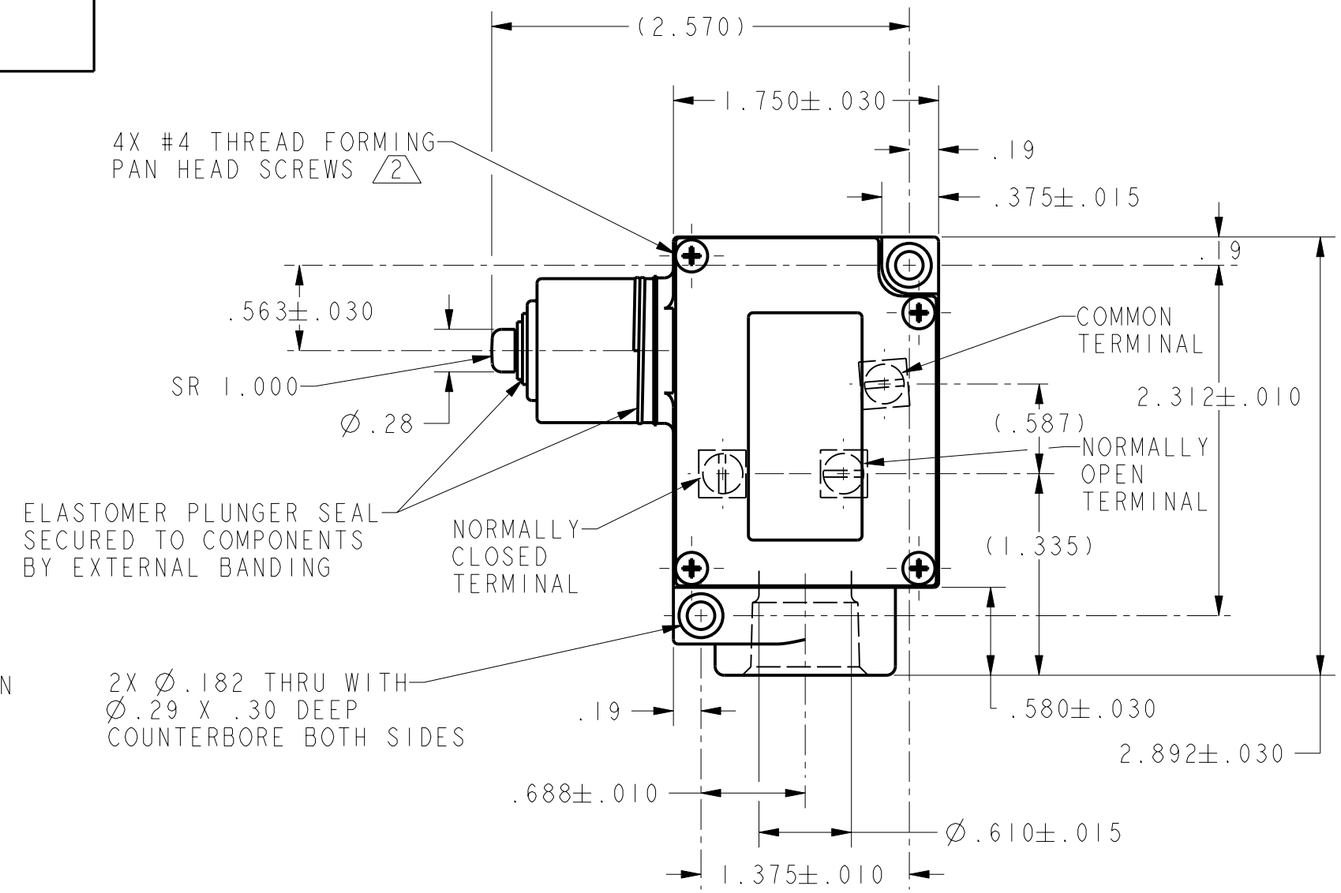

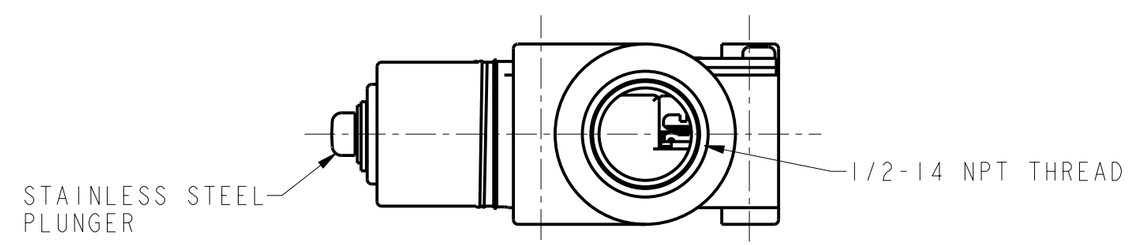

NOTES
1 - 3X 6-32 UNC PRESSURE PLATE TERMINAL SCREWS
2 FURNISHED UNASSEMBLED
3 SWITCH WILL OPERATE AND RELEASE WITHIN THIS TRAVEL

THIS DRAWING COVERS A PROPRIETARY ITEM AND IS THE PROPERTY OF MICRO SWITCH. A DIVISION OF HONEYWELL. THIS DRAWING IS NOT TO BE COPIED OR USED WITHOUT THE APPROVAL OF MICRO SWITCH

THIRD ANGLE PROJECTION

SCALE FULL

DO NOT SCALE PRINT

CHARACTERISTICS	ELECTRICAL DATA
OPERATING FORCE: ..... 44 OZ MAX	CONTACT ARRANGEMENT
TOTAL TRAVEL: ..... 3 .120 MIN	S P D T
DIFFERENTIAL TRAVEL: ..... .025 NOM	L156 11A 1/3HP 125, 250, 277 VAC 1/2A 125 VDC, 1/4A 250 VDC 4A 125 VAC "L"

UNLESS OTHERWISE SPECIFIED TOLERANCES ARE

ONE PLACE	(.0)	±.030
TWO PLACE	(.00)	±.015
THREE PLACE	(.000)	±.005
ANGLES		±

WEIGHT

ANSI Y14.5M-1982 APPLIES

BFR1-BP1
CATALOG LISTING
PAGE 1 OF 1
ISSUE 1
REPLACES
RELEASE NO. 203802
REVISIONS
CHECK
CHECK
7 SEP 01
SAV
CHECK
7 SEP 01
DRAWN
PTC/CAD
KED