MICRO SWITCH
a Honeywell Division
FED. MFG. CODE 91929

# SWITCH - ENCLOSED

CATALOG LISTING
**BZE6-2RN-F1**

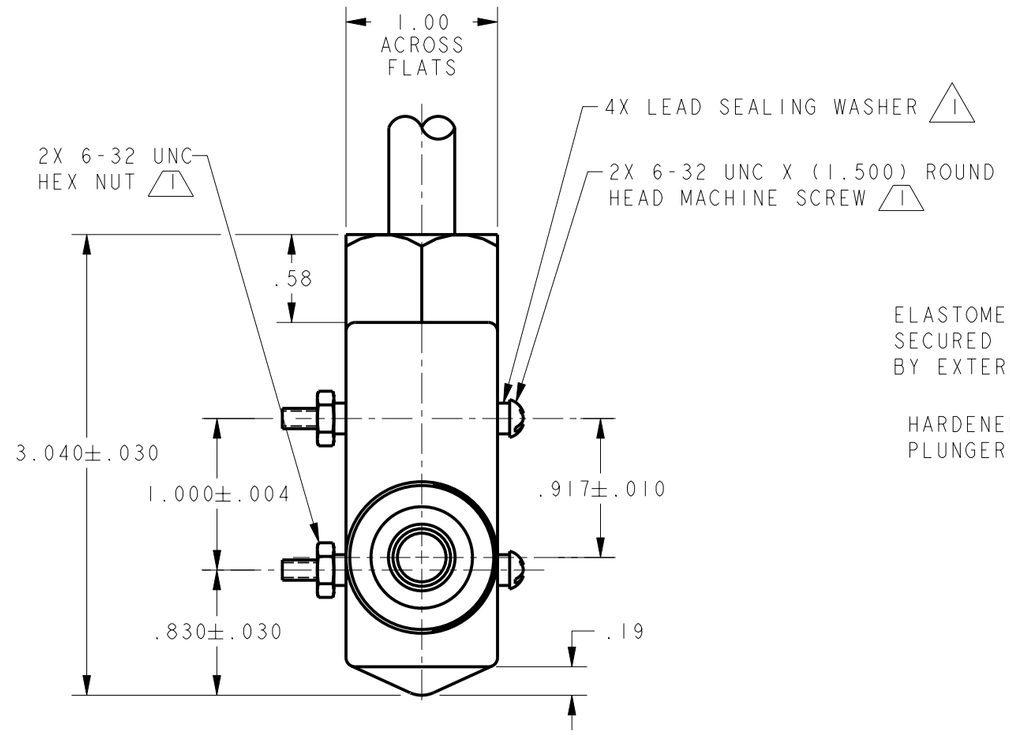


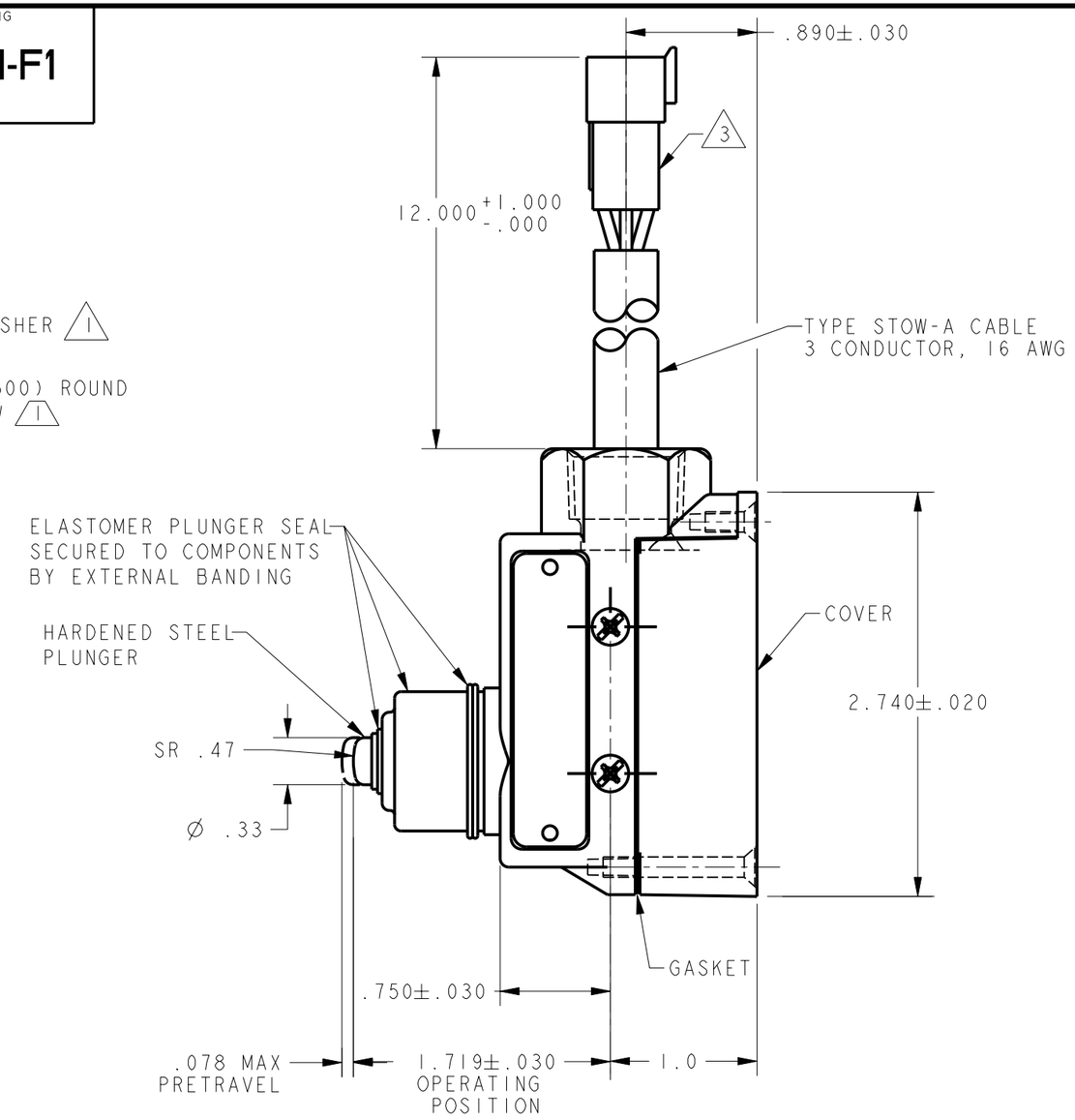


NOTES
1. FURNISHED UNASSEMBLED
2. SWITCH CAVITY FULLY POTTED
3. DEUTSCH CONNECTOR CONSISTS OF :
   THREE PIN RECEPTACLE - DT04-3P-E003
   RECEPTACLE WEDGE - W3P
   THREE PIN CONTACTS - 0460-202-16141

THIS DRAWING COVERS A PROPRIETARY ITEM AND IS THE PROPERTY OF MICRO SWITCH, A DIVISION OF HONEYWELL. THIS DRAWING IS NOT TO BE COPIED OR USED WITHOUT THE APPROVAL OF MICRO SWITCH

THIRD ANGLE PROJECTION

SCALE FULL

DO NOT SCALE PRINT

UNLESS OTHERWISE SPECIFIED TOLERANCES ARE

| | | |
|---|---|---|
| ONE PLACE | (.0) | ±.030 |
| TWO PLACE | (.00) | ±.015 |
| THREE PLACE | (.000) | ±.005 |
| ANGLES | | ± |

WEIGHT

ANSI Y14.5M-1982 APPLIES

**CHARACTERISTICS**

| | |
|---|---|
| OPERATING FORCE | 15-39 OZ |
| RELEASE FORCE | 10 OZ MIN |
| DIFFERENTIAL TRAVEL | .002 MAX |
| OVERTRAVEL | .219 MIN |

**ELECTRICAL DATA**

CONTACT ARRANGEMENT
S P D T

L270
10A 125, 250 OR 480 VAC
2A 600 VAC
1/8HP 125 VAC, 1/4HP 250 VAC
1/2A 125 VDC, 1/4A 250 VDC

| LEAD COLOR | SWITCH TERMINAL | CONNECTOR TERMINAL |
|---|---|---|
| RED | NC | A |
| BLACK | COM | C |
| WHITE | NO | B |

BZE6-2RN-F1
CATALOG LISTING
PAGE 1 OF 1
RELEASE NO. PR-24431
REPLACES
ISSUE 2
CHECK
REVISIONS
A PR-24431 TSM 22FEB00
CHECK 22FEB00
CHECK SAV
CHECK 3 NOV 99
2D
DRAWN WJC
PTC/CAD