NOTES:
1. MATERIALS AND FINISHES(PLATING THICKNESS IN MICRO-INCHES):
   BODY – ZINC DIECAST, NICKEL PLATING
   CONTACT – BECU, GOLD PLATING
   CONTACT – ZINC DIECAST, PURE MATTE TIN
   INSULATOR – PTFE
   INSULATOR – PBT
2. ELECTRICAL:
   A. IMPEDANCE: 50 OHM
   B. FREQUENCY RANGE: DC 0–11 GHz
   C. DIELECTRIC WITHSTANDING VOLTAGE: 1500 VRMS, MIN.
3. MECHANICAL:
   A. DURABILITY: 500 CYCLES MIN.
   B. TEMPERATURE RANGE: – 65°C to +165°C
4. MAX. PCB PANEL THICKNESS=2.54mm
5. OPERATING TEMP. RANGES –40 TO +85 DEG CENTIGRADE.
6. BULKPACK 500 CONNECTORS IN "ANTI-STATIC" TRAY (50 PER TRAY) PACKAGE 10 TRAYS IN CORROGATED SHIPPING CARTON.
7. (CD) INDICATES CRITICAL DIMENSIONS.
8. DO NOT SCALE THIS DRAWING.
9. UNLESS OTHERLESS SPECIFIED, ALL DIMENSIONS ARE AFTER PLATING

THIRD ANGLE PROJ.

REVISIONS

REV	DESCRIPTION	DATE	ECO	APPR
B	SEE SHEET 1	20–Jul–05	– –	– –
	SEE SHEET 1	24–Aug–06	– –	– –
B1	SEE SHEET 1	22–Jan–07	– –	A.WU
L	SEE SHEET 1	05–Aug–08	– –	SH
M	UPDATE NOTE 1 INSULATOR MATERIAL SPEC ADD NOTE 5, 6, 7, 8 & 9. \RD–DM13062701S2	18–Jul–13	49621	HARRY
N	REMOVED 3–ø1.4±0.07,4–ø1.48±0.07 WAS 2–ø1.9$^{+0.08}_{-0.07}$,ADD ø1.24±0.07.	11–Oct–13	49755	KC

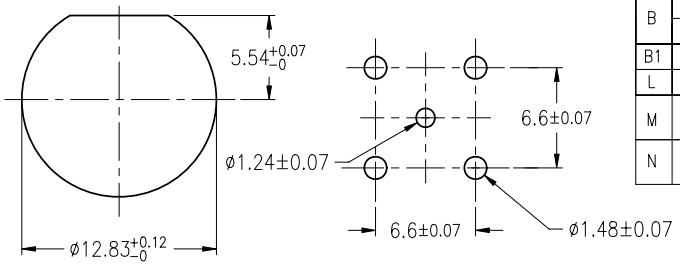

RECOMMENDED MOUNTING HOLE

PCB MOUNTING HOLE

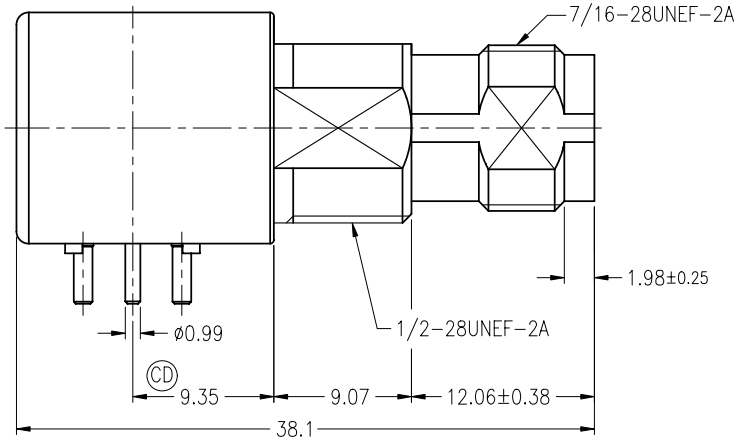

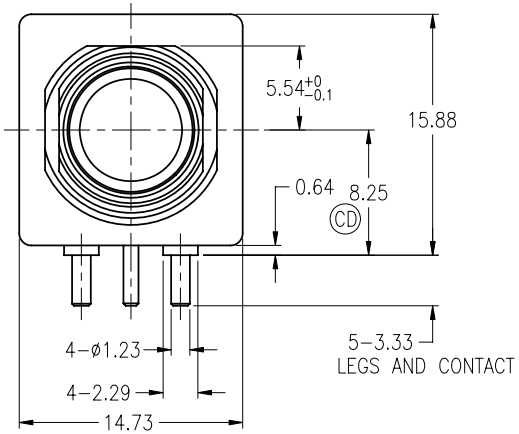

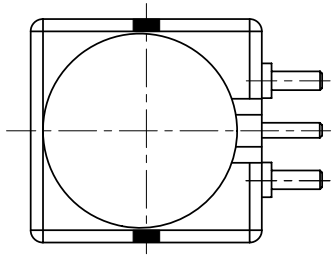

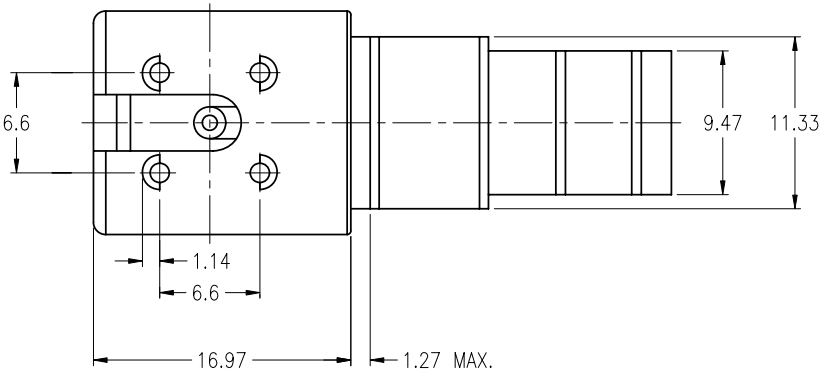

CUSTOMER OUTLINE DRAWING

ALL OTHER SHEETS ARE FOR INTERNAL USE ONLY

UNLESS OTHERWISE SPECIFIED, DIMENSIONS ARE IN METRIC AND TOLERANCES ARE:

0.5 – 6mm	6 – 30mm	30 – 120mm	ANGLES
±0.1mm	±0.2mm	± 0.3mm	±1°

NOTICE – These drawings, specifications, or other data (1) are, and remain the property of Amphenol Corp. (2) must be returned upon request; and (3) are confidential and not to be disclosed to any person other than those to whom they are given by Amphenol Corp. The furnishing of these drawings, specifications, or other data by Amphenol Corp., or to any other person to anyone for any purpose is not to be regarded by implication or otherwise in any manner licensing, granting rights or permitting such holder or any other person to manufacture, use or sell any product, process or design, patented or otherwise, that may in any way be related to or disclosed by said drawings, specifications, or other data.

MATERIAL

REFERENCE

FINISH

DRAWN J.CHEN DATE 11–Oct–13

ENGINEER A.WU DATE 22–Jan–07

APPROVED S.HSIEH DATE 11–Oct–13

CAD FILE F:\DWG\CNPD\31\5660–MSZ

TITLE TNC JACK RIGHT ANGLE PC MOUNT

SCALE: 2/1 SHEET 2 OF 2

DWG SIZE B CODE ID 74868 REV N

Amphenol RF
Danbury CT USA, Tainan Taiwan, Shenzhen China
www.amphenolrf.com

DRAWING NO. 31–5660

ITEM NO. 31–5660

PART NO. 31–5660