C8051T622/3 and C8051T326/7

Full Speed USB EPROM MCU Family

USB Function Controller
- USB specification 2.0 compliant
- Full speed (12 Mbps) or low speed (1.5 Mbps) operation
- Integrated clock recovery; no external oscillator required for full speed or low speed
- Supports six flexible endpoints
- 256-Byte USB buffer memory
- Integrated transceiver; no external resistors required

On-Chip Debug
- C8051F34A can be used as code development platform; Complete development kit available
- On-chip debug circuitry facilitates full speed, non-intrusive in-system debug
- Provides breakpoints, single stepping, inspect/modify memory and registers

High-Speed 8051 µC Core
- Pipelined instruction architecture; executes 70% of instructions in 1 or 2 system clocks
- Up to 48 MIPS throughput with 48 MHz clock
- Expanded interrupt handler

Memory
- 1280 Bytes internal data RAM (256 + 1024)
- 16/8 kB byte-programmable EPROM code memory
- EPROM can be programmed from firmware running on the device

Digital Peripherals
- Up to 16 Port I/O with high sink current capability
- Hardware enhanced SPI™, SMBus™, and two enhanced UART serial ports
- Four general purpose 16-bit counter/timers
- 16-Bit programmable counter array (PCA) with three capture/compare modules and enhanced PWM functionality

Clock Sources
- Two internal oscillators:
  - 48 MHz: ±0.25% accuracy with clock recovery enabled. Supports all USB and UART modes
  - 80/40/20/10 kHz low frequency, low power
- External oscillator: Crystal, RC, C, or CMOS Clock
- Can switch between clock sources on-the-fly; useful in power saving modes

Supply Voltage 1.8 to 5.25 V
- On-chip LDO for internal core supply
- Built-in supply voltage monitor

Package Options:
- 4 x 4 mm QFN24
- 5 x 5 mm QFN28

Temperature Range: –40 to +85 °C

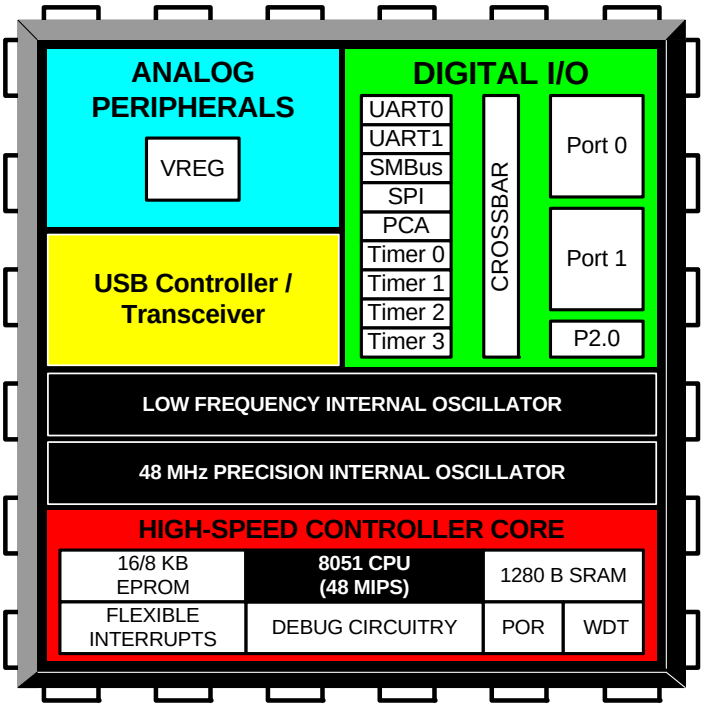

Copyright © 2011 by Silicon Laboratories

Table of Contents

1. System Overview 15
2. Ordering Information 18
3. Pin Definitions 19
4. QFN-24 Package Specifications 24
5. QFN-28 Package Specifications 26
6. Electrical Characteristics 28
6.1. Absolute Maximum Specifications 28
6.2. Electrical Characteristics 29
6.3. Typical Performance Curves 34
7. Voltage Regulators (REG0 and REG1) 35
7.1. Voltage Regulator (REG0) 35
7.1.1. Regulator Mode Selection 35
7.1.2. VBUS Detection 35
7.2. Voltage Regulator (REG1) 38
8. CIP-51 Microcontroller 40
8.1. Instruction Set 41
8.1.1. Instruction and CPU Timing 41
8.2. CIP-51 Register Descriptions 45
9. Prefetch Engine 49
10. Memory Organization 50
10.1. Program Memory 50
10.1.1. Derivative ID 51
10.1.2. Serialization 51
10.2. Data Memory 51
10.2.1. Internal RAM 51
10.2.1.1. General Purpose Registers 52
10.2.1.2. Bit Addressable Locations 52
10.2.1.3. Stack 52
10.2.2. External RAM 52
10.2.3. Accessing USB FIFO Space 53
11. Special Function Registers 56
12. Interrupts 60
12.1. MCU Interrupt Sources and Vectors 60
12.1.1. Interrupt Priorities 61
12.1.2. Interrupt Latency 61
12.2. Interrupt Register Descriptions 61
12.3. INT0 and INT1 External Interrupt Sources 69
13. Program Memory (EPROM) 71
13.1. Programming the EPROM Memory 71
13.1.1. EPROM Programming over the C2 Interface 71
13.1.2. EPROM In-Application Programming 72
13.2. Security Options 73
13.3. EPROM Writing Guidelines 73

13.3.1. VDD Maintenance and the VDD monitor ... 73
13.3.2. PSWE Maintenance ... 74
13.3.3. System Clock ... 74
13.4. Program Memory CRC ... 74
13.4.1. Performing 32-bit CRCs on Full EPROM Content ... 74
13.4.2. Performing 16-bit CRCs on 256-Byte EPROM Blocks ... 74
14. Power Management Modes ... 77
14.1. Idle Mode ... 77
14.2. Stop Mode ... 78
14.3. Suspend Mode ... 78
15. Reset Sources ... 80
15.1. Power-On Reset ... 81
15.2. Power-Fail Reset/VDD Monitor ... 82
15.3. External Reset ... 83
15.4. Missing Clock Detector Reset ... 83
15.5. PCA Watchdog Timer Reset ... 83
15.6. EPROM Error Reset ... 84
15.7. Software Reset ... 84
15.8. USB Reset ... 84
16. Oscillators and Clock Selection ... 86
16.1. System Clock Selection ... 87
16.2. USB Clock Selection ... 87
16.3. Programmable Internal High-Frequency (H-F) Oscillator ... 89
16.3.1. Internal Oscillator Suspend Mode ... 89
16.4. Clock Multiplier ... 91
16.5. Programmable Internal Low-Frequency (L-F) Oscillator ... 92
16.5.1. Calibrating the Internal L-F Oscillator ... 92
16.6. External Oscillator Drive Circuit ... 93
16.6.1. External Crystal Mode ... 93
16.6.2. External RC Example ... 95
16.6.3. External Capacitor Example ... 95
17. Port Input/Output ... 97
17.1. Port I/O Modes of Operation ... 98
17.1.1. Port Pins Configured for Analog I/O ... 98
17.1.2. Port Pins Configured For Digital I/O ... 98
17.1.3. Interfacing Port I/O to 5 V Logic ... 99
17.2. Assigning Port I/O Pins to Analog and Digital Functions ... 99
17.2.1. Assigning Port I/O Pins to Analog Functions ... 99
17.2.2. Assigning Port I/O Pins to Digital Functions ... 99
17.2.3. Assigning Port I/O Pins to External Digital Event Capture Functions ... 100
17.3. Priority Crossbar Decoder ... 100
17.4. Port I/O Initialization ... 104
17.5. Port Match ... 107
17.6. Special Function Registers for Accessing and Configuring Port I/O ... 109
18. Universal Serial Bus Controller (USB0) ... 116

18.1. Endpoint Addressing 116
18.2. USB Transceiver 117
18.3. USB Register Access 119
18.4. USB Clock Configuration 123
18.5. FIFO Management 124
18.5.1. FIFO Split Mode 125
18.5.2. FIFO Double Buffering 125
18.5.1. FIFO Access 126
18.6. Function Addressing 127
18.7. Function Configuration and Control 127
18.8. Interrupts 130
18.9. The Serial Interface Engine 136
18.10. Endpoint0 136
18.10.1. Endpoint0 SETUP Transactions 137
18.10.2. Endpoint0 IN Transactions 137
18.10.3. Endpoint0 OUT Transactions 138
18.11. Configuring Endpoints1-2 140
18.12. Controlling Endpoints1-2 IN 141
18.12.1. Endpoints1-2 IN Interrupt or Bulk Mode 141
18.12.2. Endpoints1-2 IN Isochronous Mode 142
18.13. Controlling Endpoints1-2 OUT 144
18.13.1. Endpoints1-2 OUT Interrupt or Bulk Mode 145
18.13.2. Endpoints1-2 OUT Isochronous Mode 145
19. SMBus 149
19.1. Supporting Documents 150
19.2. SMBus Configuration 150
19.3. SMBus Operation 150
19.3.1. Transmitter Vs. Receiver 151
19.3.2. Arbitration 151
19.3.3. Clock Low Extension 151
19.3.4. SCL Low Timeout 151
19.3.5. SCL High (SMBus Free) Timeout 152
19.4. Using the SMBus 152
19.4.1. SMBus Configuration Register 152
19.4.2. SMB0CN Control Register 156
19.4.2.1. Software ACK Generation 156
19.4.2.2. Hardware ACK Generation 156
19.4.3. Hardware Slave Address Recognition 158
19.4.4. Data Register 161
19.5. SMBus Transfer Modes 162
19.5.1. Write Sequence (Master) 162
19.5.2. Read Sequence (Master) 163
19.5.3. Write Sequence (Slave) 164
19.5.4. Read Sequence (Slave) 165
19.6. SMBus Status Decoding 165

20. UART0 171
20.1. Enhanced Baud Rate Generation 172
20.2. Operational Modes 173
20.2.1. 8-Bit UART 173
20.2.2. 9-Bit UART 174
20.3. Multiprocessor Communications 175
21. UART1 179
21.1. Baud Rate Generator 179
21.2. Data Format 180
21.3. Configuration and Operation 181
21.3.1. Data Transmission 182
21.3.2. Data Reception 182
21.3.3. Multiprocessor Communications 183
22. Enhanced Serial Peripheral Interface (SPI0) 189
22.1. Signal Descriptions 190
22.1.1. Master Out, Slave In (MOSI) 190
22.1.2. Master In, Slave Out (MISO) 190
22.1.3. Serial Clock (SCK) 190
22.1.4. Slave Select (NSS) 190
22.2. SPI0 Master Mode Operation 190
22.3. SPI0 Slave Mode Operation 192
22.4. SPI0 Interrupt Sources 192
22.5. Serial Clock Phase and Polarity 193
22.6. SPI Special Function Registers 195
23. Timers 202
23.1. Timer 0 and Timer 1 204
23.1.1. Mode 0: 13-bit Counter/Timer 204
23.1.2. Mode 1: 16-bit Counter/Timer 205
23.1.3. Mode 2: 8-bit Counter/Timer with Auto-Reload 205
23.1.4. Mode 3: Two 8-bit Counter/Timers (Timer 0 Only) 206
23.2. Timer 2 212
23.2.1. 16-bit Timer with Auto-Reload 212
23.2.2. 8-bit Timers with Auto-Reload 213
23.2.3. Low-Frequency Oscillator (LFO) Capture Mode 214
23.3. Timer 3 218
23.3.1. 16-bit Timer with Auto-Reload 218
23.3.2. 8-bit Timers with Auto-Reload 219
23.3.3. Low-Frequency Oscillator (LFO) Capture Mode 220
24. Programmable Counter Array 224
24.1. PCA Counter/Timer 225
24.2. PCA0 Interrupt Sources 226
24.3. Capture/Compare Modules 227
24.3.1. Edge-triggered Capture Mode 228
24.3.2. Software Timer (Compare) Mode 229
24.3.3. High-Speed Output Mode 230

24.3.4. Frequency Output Mode 231
24.3.5. 8-bit, 9-bit, 10-bit and 11-bit Pulse Width Modulator Modes 232
24.3.5.1. 8-bit Pulse Width Modulator Mode..... 232
24.3.5.2. 9/10/11-bit Pulse Width Modulator Mode..... 233
24.3.6. 16-Bit Pulse Width Modulator Mode..... 234
24.4. Watchdog Timer Mode 235
24.4.1. Watchdog Timer Operation 235
24.4.2. Watchdog Timer Usage 236
24.5. Register Descriptions for PCA0..... 237
25. C2 Interface 244
25.1. C2 Interface Registers..... 244
25.2. C2 Pin Sharing 252
Document Change List..... 253
Contact Information..... 254

List of Figures

Figure 1.1. C8051T622/3 and C8051T326/7 Block Diagram 16
Figure 1.2. Typical Bus-Powered Connections for the C8051T622/3 and C8051T326 17
Figure 1.3. Typical Bus-Powered Connections for the C8051T327 17
Figure 3.1. C8051T622/3 (QFN-24) Pinout Diagram (Top View) 21
Figure 3.2. C8051T326 (QFN-28) Pinout Diagram (Top View) 22
Figure 3.3. C8051T327 (QFN-28) Pinout Diagram (Top View) 23
Figure 4.1. QFN-24 Package Drawing 24
Figure 4.2. QFN-24 Recommended PCB Land Pattern 25
Figure 5.1. QFN-28 Package Drawing 26
Figure 5.2. QFN-28 Recommended PCB Land Pattern 27
Figure 6.1. Normal Mode Digital Supply Current vs. Frequency (MPCE = 1) 34
Figure 6.2. Idle Mode Digital Supply Current vs. Frequency (MPCE = 1) 34
Figure 7.1. REG0 Configuration: USB Bus-Powered 35
Figure 7.2. REG0 Configuration: USB Self-Powered 36
Figure 7.3. REG0 Configuration: USB Self-Powered, Regulator Disabled 36
Figure 7.4. REG0 Configuration: No USB Connection 37
Figure 8.1. CIP-51 Block Diagram 40
Figure 10.1. Memory Map 50
Figure 10.2. Program Memory Map 51
Figure 10.3. USB FIFO Space and XRAM Memory Map with USBFAE set to 1 54
Figure 15.1. Reset Sources 80
Figure 15.2. Power-On and VDD Monitor Reset Timing 81
Figure 16.1. Oscillator Options 86
Figure 16.2. External Crystal Example 94
Figure 17.1. Port I/O Functional Block Diagram 97
Figure 17.2. Port I/O Cell Block Diagram 98
Figure 17.3. Priority Crossbar Decoder Potential Pin Assignments 101
Figure 17.4. Priority Crossbar Decoder Example 1—No Skipped Pins 102
Figure 17.5. Priority Crossbar Decoder Example 2—Skipping Pins 103
Figure 18.1. USB0 Block Diagram 116
Figure 18.2. USB0 Register Access Scheme 119
Figure 18.3. USB FIFO Allocation 125
Figure 19.1. SMBus Block Diagram 149
Figure 19.2. Typical SMBus Configuration 150
Figure 19.3. SMBus Transaction 151
Figure 19.4. Typical SMBus SCL Generation 153
Figure 19.5. Typical Master Write Sequence 162
Figure 19.6. Typical Master Read Sequence 163
Figure 19.7. Typical Slave Write Sequence 164
Figure 19.8. Typical Slave Read Sequence 165
Figure 20.1. UART0 Block Diagram 171
Figure 20.2. UART0 Baud Rate Logic 172

Figure 20.3. UART Interconnect Diagram 173
Figure 20.4. 8-Bit UART Timing Diagram 173
Figure 20.5. 9-Bit UART Timing Diagram 174
Figure 20.6. UART Multi-Processor Mode Interconnect Diagram 175
Figure 21.1. UART1 Block Diagram 179
Figure 21.2. UART1 Timing Without Parity or Extra Bit 181
Figure 21.3. UART1 Timing With Parity 181
Figure 21.4. UART1 Timing With Extra Bit 181
Figure 21.5. Typical UART Interconnect Diagram 182
Figure 21.6. UART Multi-Processor Mode Interconnect Diagram 183
Figure 22.1. SPI Block Diagram 189
Figure 22.2. Multiple-Master Mode Connection Diagram 191
Figure 22.3. 3-Wire Single Master and 3-Wire Single Slave Mode Connection Diagram 191
Figure 22.4. 4-Wire Single Master Mode and 4-Wire Slave Mode Connection Diagram 192
Figure 22.5. Master Mode Data/Clock Timing 194
Figure 22.6. Slave Mode Data/Clock Timing (CKPHA = 0) 194
Figure 22.7. Slave Mode Data/Clock Timing (CKPHA = 1) 195
Figure 22.8. SPI Master Timing (CKPHA = 0) 199
Figure 22.9. SPI Master Timing (CKPHA = 1) 199
Figure 22.10. SPI Slave Timing (CKPHA = 0) 200
Figure 22.11. SPI Slave Timing (CKPHA = 1) 200
Figure 23.1. T0 Mode 0 Block Diagram 205
Figure 23.2. T0 Mode 2 Block Diagram 206
Figure 23.3. T0 Mode 3 Block Diagram 207
Figure 23.4. Timer 2 16-Bit Mode Block Diagram 212
Figure 23.5. Timer 2 8-Bit Mode Block Diagram 213
Figure 23.6. Timer 2 Low-Frequency Oscillation Capture Mode Block Diagram ... 214
Figure 23.7. Timer 3 16-Bit Mode Block Diagram 218
Figure 23.8. Timer 3 8-Bit Mode Block Diagram 219
Figure 23.9. Timer 3 Low-Frequency Oscillation Capture Mode Block Diagram ... 220
Figure 24.1. PCA Block Diagram 224
Figure 24.2. PCA Counter/Timer Block Diagram 226
Figure 24.3. PCA Interrupt Block Diagram 227
Figure 24.4. PCA Capture Mode Diagram 229
Figure 24.5. PCA Software Timer Mode Diagram 230
Figure 24.6. PCA High-Speed Output Mode Diagram 231
Figure 24.7. PCA Frequency Output Mode 232
Figure 24.8. PCA 8-Bit PWM Mode Diagram 233
Figure 24.9. PCA 9, 10 and 11-Bit PWM Mode Diagram 234
Figure 24.10. PCA 16-Bit PWM Mode 235
Figure 24.11. PCA Module 2 with Watchdog Timer Enabled 236
Figure 25.1. Typical C2 Pin Sharing 252

List of Tables

Table 2.1. Product Selection Guide 18
Table 3.1. Pin Definitions for the C8051T622/3 and C8051T326/7 19
Table 4.1. QFN-24 Package Dimensions 24
Table 4.2. QFN-24 PCB Land Pattern Dimesions 25
Table 5.1. QFN-28 Package Dimensions 26
Table 5.2. QFN-28 PCB Land Pattern Dimensions 27
Table 6.1. Absolute Maximum Ratings 28
Table 6.2. Global Electrical Characteristics 29
Table 6.3. Port I/O DC Electrical Characteristics 30
Table 6.4. Reset Electrical Characteristics 30
Table 6.5. Internal Voltage Regulator Electrical Characteristics 31
Table 6.6. EPROM Electrical Characteristics 31
Table 6.7. Internal High-Frequency Oscillator Electrical Characteristics 32
Table 6.8. Internal Low-Frequency Oscillator Electrical Characteristics 32
Table 6.9. External Oscillator Electrical Characteristics 32
Table 6.10. USB Transceiver Electrical Characteristic 33
Table 8.1. CIP-51 Instruction Set Summary 42
Table 11.1. Special Function Register (SFR) Memory Map 56
Table 11.2. Special Function Registers 57
Table 12.1. Interrupt Summary 62
Table 13.1. Security Byte Decoding 73
Table 17.1. Port I/O Assignment for Analog Functions 99
Table 17.2. Port I/O Assignment for Digital Functions 99
Table 17.3. Port I/O Assignment for External Digital Event Capture Functions 100
Table 18.1. Endpoint Addressing Scheme 117
Table 18.2. USB0 Controller Registers 122
Table 18.3. FIFO Configurations 126
Table 19.1. SMBus Clock Source Selection 153
Table 19.2. Minimum SDA Setup and Hold Times 154
Table 19.3. Sources for Hardware Changes to SMB0CN 158
Table 19.4. Hardware Address Recognition Examples (EHACK = 1) 159
Table 19.5. SMBus Status Decoding With Hardware ACK Generation Disabled (EHACK = 0) 166
Table 19.6. SMBus Status Decoding With Hardware ACK Generation Enabled (EHACK = 1) 168
Table 20.1. Timer Settings for Standard Baud Rates Using The Internal 24.5 MHz Oscillator 178
Table 20.2. Timer Settings for Standard Baud Rates Using an External 22.1184 MHz Oscillator 178
Table 21.1. Baud Rate Generator Settings for Standard Baud Rates 180
Table 22.1. SPI Slave Timing Parameters 201
Table 24.1. PCA Timebase Input Options 225

Table 24.2. PCA0CPM and PCA0PWM Bit Settings for PCA Capture/Compare Modules 228
Table 24.3. Watchdog Timer Timeout Intervals1 237

List of Registers

SFR Definition 7.1. REG01CN: Voltage Regulator Control 39
SFR Definition 8.1. DPL: Data Pointer Low Byte 46
SFR Definition 8.2. DPH: Data Pointer High Byte 46
SFR Definition 8.3. SP: Stack Pointer 47
SFR Definition 8.4. ACC: Accumulator 47
SFR Definition 8.5. B: B Register 47
SFR Definition 8.6. PSW: Program Status Word 48
SFR Definition 9.1. PFE0CN: Prefetch Engine Control 49
SFR Definition 10.1. EMI0CN: External Memory Interface Control 53
SFR Definition 10.2. EMI0CF: External Memory Configuration 55
SFR Definition 12.1. IE: Interrupt Enable 63
SFR Definition 12.2. IP: Interrupt Priority 64
SFR Definition 12.3. EIE1: Extended Interrupt Enable 1 65
SFR Definition 12.4. EIP1: Extended Interrupt Priority 1 66
SFR Definition 12.5. EIE2: Extended Interrupt Enable 2 67
SFR Definition 12.6. EIP2: Extended Interrupt Priority 2 68
SFR Definition 12.7. IT01CF: INT0/INT1 ConfigurationO 70
SFR Definition 13.1. PSCTL: Program Store R/W Control 75
SFR Definition 13.2. MEMKEY: EPROM Memory Lock and Key 75
SFR Definition 13.3. IAPCN: In-Application Programming Control 76
SFR Definition 14.1. PCON: Power Control 79
SFR Definition 15.1. VDM0CN: VDD Monitor Control 83
SFR Definition 15.2. RSTSRC: Reset Source 85
SFR Definition 16.1. CLKSEL: Clock Select 88
SFR Definition 16.2. OSCICL: Internal H-F Oscillator Calibration 89
SFR Definition 16.3. OSCICN: Internal H-F Oscillator Control 90
SFR Definition 16.4. CLKMUL: Clock Multiplier Control 91
SFR Definition 16.5. OSCLCN: Internal L-F Oscillator Control 92
SFR Definition 16.6. OSCXCN: External Oscillator Control 96
SFR Definition 17.1. XBR0: Port I/O Crossbar Register 0 105
SFR Definition 17.2. XBR1: Port I/O Crossbar Register 1 106
SFR Definition 17.3. XBR2: Port I/O Crossbar Register 2 107
SFR Definition 17.4. P0MASK: Port 0 Mask Register 108
SFR Definition 17.5. P0MAT: Port 0 Match Register 108
SFR Definition 17.6. P1MASK: Port 1 Mask Register 109
SFR Definition 17.7. P1MAT: Port 1 Match Register 109
SFR Definition 17.8. P0: Port 0 110
SFR Definition 17.9. P0MDIN: Port 0 Input Mode 111
SFR Definition 17.10. P0MDOUT: Port 0 Output Mode 111
SFR Definition 17.11. P0SKIP: Port 0 Skip 112
SFR Definition 17.12. P1: Port 1 112
SFR Definition 17.13. P1MDIN: Port 1 Input Mode 113
SFR Definition 17.14. P1MDOUT: Port 1 Output Mode 113

SFR Definition 17.15. P1SKIP: Port 1 Skip 114
SFR Definition 17.16. P2: Port 2 114
SFR Definition 17.17. P2MDOUT: Port 2 Output Mode 115
SFR Definition 18.1. USB0XCN: USB0 Transceiver Control 118
SFR Definition 18.2. USB0ADR: USB0 Indirect Address 120
SFR Definition 18.3. USB0DAT: USB0 Data 121
USB Register Definition 18.4. INDEX: USB0 Endpoint Index 123
USB Register Definition 18.5. CLKREC: Clock Recovery Control 124
USB Register Definition 18.6. FIFOn: USB0 Endpoint FIFO Access 126
USB Register Definition 18.7. FADDR: USB0 Function Address 127
USB Register Definition 18.8. POWER: USB0 Power 129
USB Register Definition 18.9. FRAMEL: USB0 Frame Number Low 130
USB Register Definition 18.10. FRAMEH: USB0 Frame Number High 130
USB Register Definition 18.11. IN1INT: USB0 IN Endpoint Interrupt 131
USB Register Definition 18.12. OUT1INT: USB0 OUT Endpoint Interrupt 132
USB Register Definition 18.13. CMINT: USB0 Common Interrupt 133
USB Register Definition 18.14. IN1IE: USB0 IN Endpoint Interrupt Enable 134
USB Register Definition 18.15. OUT1IE: USB0 OUT Endpoint Interrupt Enable 135
USB Register Definition 18.16. CMIE: USB0 Common Interrupt Enable 136
USB Register Definition 18.17. E0CSR: USB0 Endpoint0 Control 139
USB Register Definition 18.18. E0CNT: USB0 Endpoint0 Data Count 140
USB Register Definition 18.19. EENABLE: USB0 Endpoint Enable 141
USB Register Definition 18.20. EINCSRL: USB0 IN Endpoint Control Low 143
USB Register Definition 18.21. EINCSRH: USB0 IN Endpoint Control High 144
USB Register Definition 18.22. EOUTCSRL: USB0 OUT Endpoint Control Low Byte 146
USB Register Definition 18.23. EOUTCSRH: USB0 OUT Endpoint Control High Byte 147
USB Register Definition 18.24. EOUTCNTL: USB0 OUT Endpoint Count Low 147
USB Register Definition 18.25. EOUTCNTH: USB0 OUT Endpoint Count High 148
SFR Definition 19.1. SMB0CF: SMBus Clock/Configuration 155
SFR Definition 19.2. SMB0CN: SMBus Control 157
SFR Definition 19.3. SMB0ADR: SMBus Slave Address 159
SFR Definition 19.4. SMB0ADM: SMBus Slave Address Mask 160
SFR Definition 19.5. SMB0DAT: SMBus Data 161
SFR Definition 20.1. SCON0: Serial Port 0 Control 176
SFR Definition 20.2. SBUF0: Serial (UART0) Port Data Buffer 177
SFR Definition 21.1. SCON1: UART1 Control 184
SFR Definition 21.2. SMOD1: UART1 Mode 185
SFR Definition 21.3. SBUF1: UART1 Data Buffer 186
SFR Definition 21.4. SBCON1: UART1 Baud Rate Generator Control 187
SFR Definition 21.5. SBRLH1: UART1 Baud Rate Generator High Byte 187
SFR Definition 21.6. SBRLL1: UART1 Baud Rate Generator Low Byte 188
SFR Definition 22.1. SPI0CFG: SPI0 Configuration 196
SFR Definition 22.2. SPI0CN: SPI0 Control 197
SFR Definition 22.3. SPI0CKR: SPI0 Clock Rate 198

SFR Definition 22.4. SPI0DAT: SPI0 Data 198
SFR Definition 23.1. CKCON: Clock Control 203
SFR Definition 23.2. TCON: Timer Control 208
SFR Definition 23.3. TMOD: Timer Mode 209
SFR Definition 23.4. TL0: Timer 0 Low Byte 210
SFR Definition 23.5. TL1: Timer 1 Low Byte 210
SFR Definition 23.6. TH0: Timer 0 High Byte 211
SFR Definition 23.7. TH1: Timer 1 High Byte 211
SFR Definition 23.8. TMR2CN: Timer 2 Control 215
SFR Definition 23.9. TMR2RLL: Timer 2 Reload Register Low Byte 216
SFR Definition 23.10. TMR2RLH: Timer 2 Reload Register High Byte 216
SFR Definition 23.11. TMR2L: Timer 2 Low Byte 216
SFR Definition 23.12. TMR2H Timer 2 High Byte 217
SFR Definition 23.13. TMR3CN: Timer 3 Control 221
SFR Definition 23.14. TMR3RLL: Timer 3 Reload Register Low Byte 222
SFR Definition 23.15. TMR3RLH: Timer 3 Reload Register High Byte 222
SFR Definition 23.16. TMR3L: Timer 3 Low Byte 222
SFR Definition 23.17. TMR3H Timer 3 High Byte 223
SFR Definition 24.1. PCA0CN: PCA Control 238
SFR Definition 24.2. PCA0MD: PCA Mode 239
SFR Definition 24.3. PCA0PWM: PCA PWM Configuration 240
SFR Definition 24.4. PCA0CPMn: PCA Capture/Compare Mode 241
SFR Definition 24.5. PCA0L: PCA Counter/Timer Low Byte 242
SFR Definition 24.6. PCA0H: PCA Counter/Timer High Byte 242
SFR Definition 24.7. PCA0CPLn: PCA Capture Module Low Byte 243
SFR Definition 24.8. PCA0CPHn: PCA Capture Module High Byte 243
C2 Register Definition 25.1. C2ADD: C2 Address 244
C2 Register Definition 25.2. DEVICEID: C2 Device ID 246
C2 Register Definition 25.3. REVID: C2 Revision ID 246
C2 Register Definition 25.4. DEVCTL: C2 Device Control 247
C2 Register Definition 25.5. EPCTL: EPROM Programming Control Register 247
C2 Register Definition 25.6. EPDAT: C2 EPROM Data 248
C2 Register Definition 25.7. EPSTAT: C2 EPROM Status 248
C2 Register Definition 25.8. EPADDRH: C2 EPROM Address High Byte 249
C2 Register Definition 25.9. EPADDRL: C2 EPROM Address Low Byte 249
C2 Register Definition 25.10. CRC0: CRC Byte 0 250
C2 Register Definition 25.11. CRC1: CRC Byte 1 250
C2 Register Definition 25.12. CRC2: CRC Byte 2 251
C2 Register Definition 25.13. CRC3: CRC Byte 3 251

1. System Overview

C8051T622/3 and C8051T326/7 devices are fully integrated mixed-signal System-on-a-Chip MCUs. Highlighted features are listed below. Refer to Table 2.1 for specific product feature selection and part ordering numbers.

- High-speed pipelined 8051-compatible microcontroller core (up to 48 MIPS)
- In-system, full-speed, non-intrusive debug interface (on-chip)
- C8051F34A ISP flash device is available for quick in-system code development
- Universal Serial Bus (USB) Function Controller with six flexible endpoint pipes, integrated transceiver, and 256-Byte FIFO RAM
- Supply Voltage Regulator
- Precision calibrated 48 MHz internal oscillator
- Internal low-frequency oscillator for additional power savings
- 16 kB or 8 kB of on-chip byte-programmable EPROM—(512 bytes are reserved)
- 1280 bytes of on-chip RAM (256 + 1 kB)
- SMBus/I^2C, 2 UARTs, and Enhanced SPI serial interfaces implemented in hardware
- Four general-purpose 16-bit timers
- Programmable Counter/Timer Array (PCA) with three capture/compare modules and Watchdog Timer function
- On-chip Power-On Reset and V_{DD} Monitor
- Up to 16 Port I/O

With on-chip Power-On Reset, V_{DD} monitor, Watchdog Timer, and clock oscillator, the C8051T622/3 and C8051T326/7 devices are truly stand-alone System-on-a-Chip solutions. User software has complete control of all peripherals, and may individually shut down any or all peripherals for power savings.

Code written for the C8051T622/3 and C8051T326/7 family of processors will run on the C8051F34A Mixed-signal ISP Flash microcontroller, providing a quick, cost-effective way to develop code without requiring special emulator circuitry. The C8051T622/3 and C8051T326/7 processors include Silicon Laboratories' 2-Wire C2 Debug and Programming interface, which allows non-intrusive (uses no on-chip resources), full speed, in-circuit debugging using the production MCU installed in the final application. This debug logic supports inspection of memory, viewing and modification of special function registers, setting breakpoints, single stepping, run and halt commands. All analog and digital peripherals are fully functional while debugging using C2. The two C2 interface pins can be shared with user functions, allowing in-system debugging without occupying package pins.

Each device is specified for 1.8-to-5.25 V operation over the industrial temperature range (–40 to +85 °C). For voltages above 3.6 V, the on-chip Voltage Regulator must be used. A minimum of 3.0 V is required for USB communication. An additional internal LDO is used to supply the processor core voltage at 1.8 V. The Port I/O and $\overline{RST}$ pins are tolerant of input signals up to 5 V. The C8051T622/3 are available in 24-pin QFN packaging and the C8051T326/7 are available in 28-pin QFN packaging. See Table 2.1 for ordering information. A block diagram is shown in Figure 1.1.

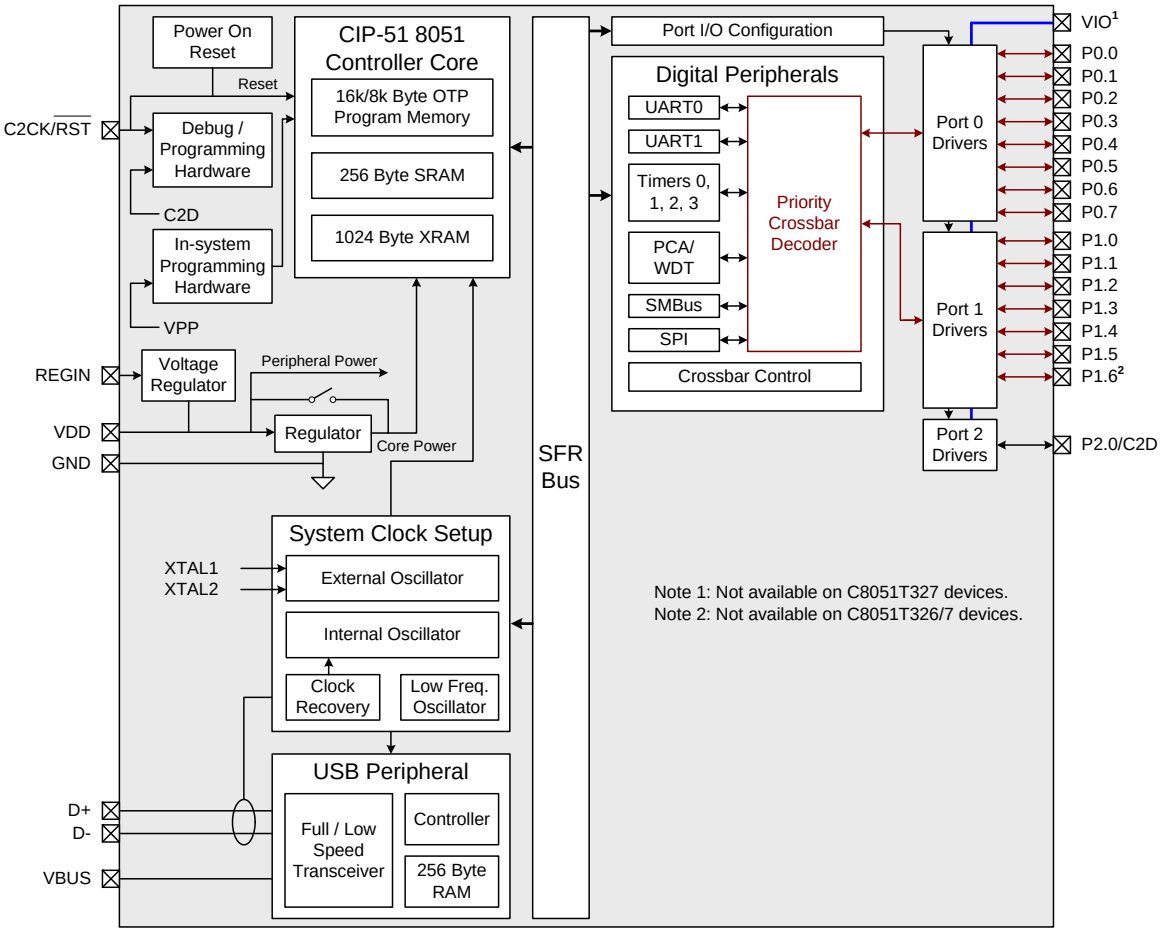

Figure 1.1. C8051T622/3 and C8051T326/7 Block Diagram

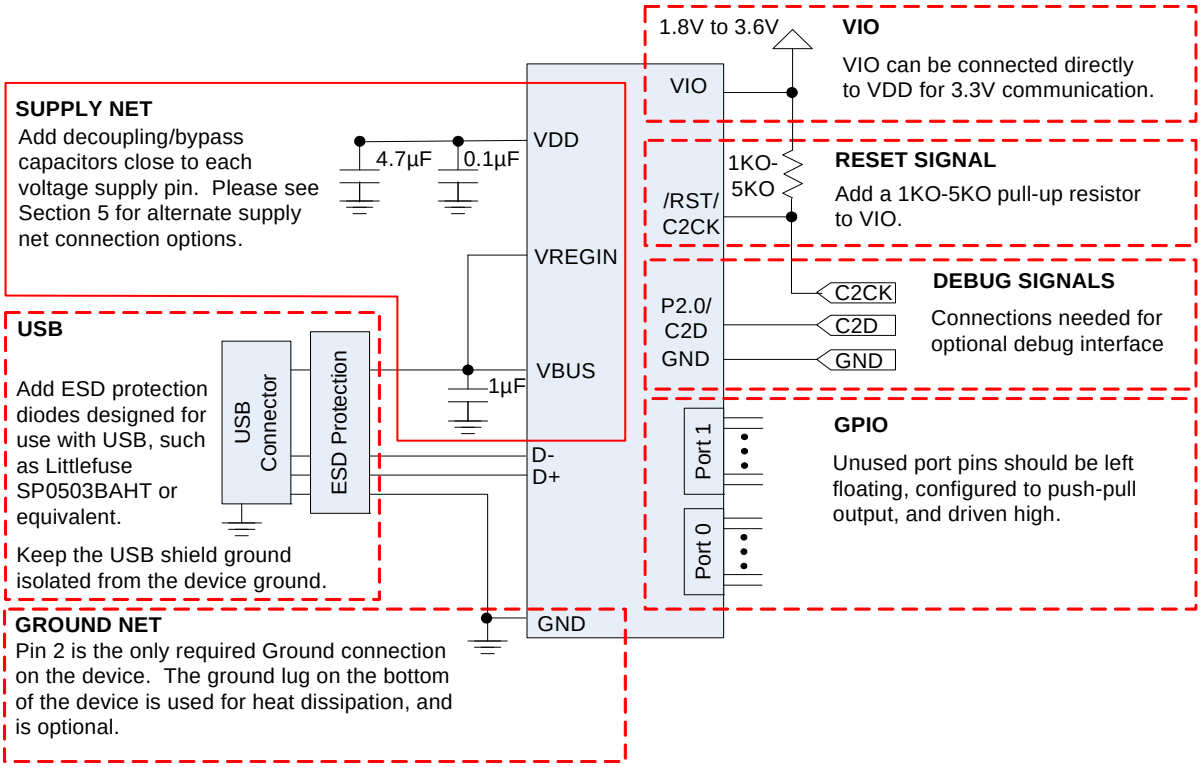

Figure 1.2. Typical Bus-Powered Connections for the C8051T622/3 and C8051T326

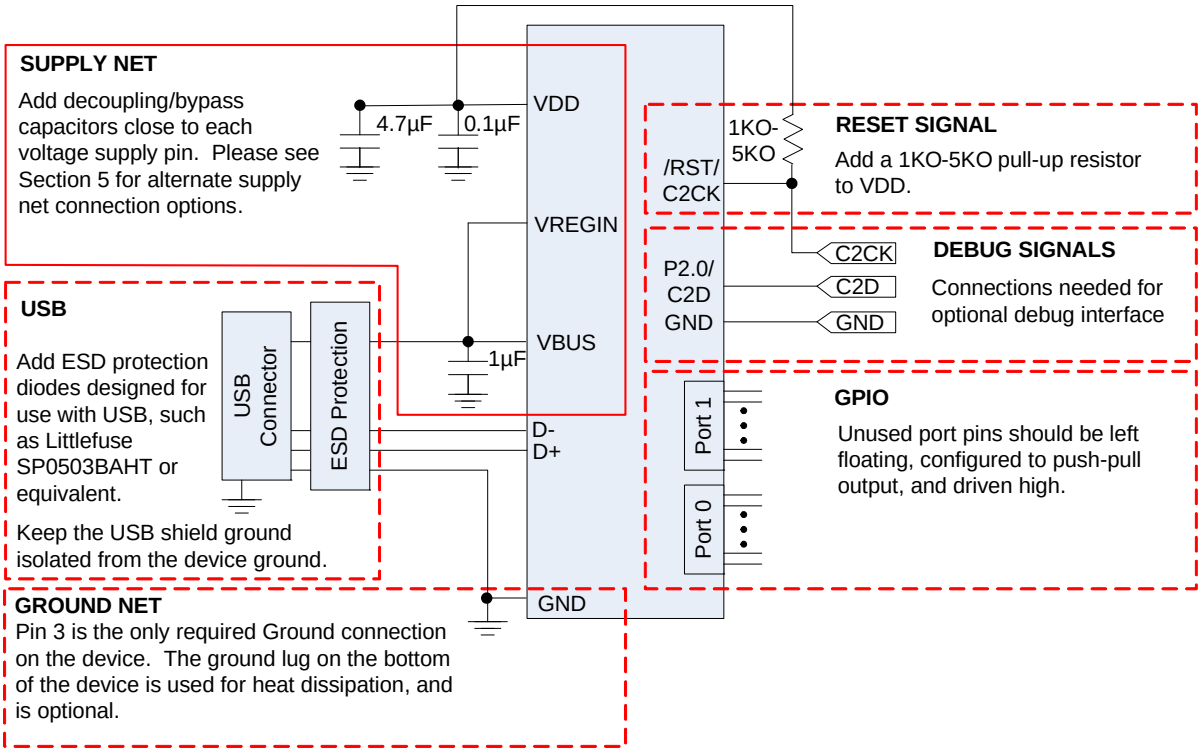

Figure 1.3. Typical Bus-Powered Connections for the C8051T327

2. Ordering Information

Table 2.1. Product Selection Guide

Ordering Part Number	MIPS (Peak)	EPROM Code Memory (Bytes)	RAM (Bytes)	Calibrated Internal 48 MHz Oscillator	Internal 80 kHz Oscillator	USB with 256 Bytes Endpoint RAM	Supply Voltage Regulator	SMBus/I^2C	Enhanced SPI	UARTs	Timers (16-bit)	Programmable Counter Array	Digital Port I/Os	Separate Port I/O Supply (VIO)	Lead-free (RoHS Compliant)	Package
C8051T622-GM	48	16k[1]	1280	Y	Y	Y	Y	Y	Y	2	4	Y	16	Y	Y	QFN24
C8051T623-GM	48	8k[1]	1280	Y	Y	Y	Y	Y	Y	2	4	Y	16	Y	Y	QFN24
C8051T326-GM[2]	48	16k[1]	1280	Y	Y	Y	Y	Y	Y	2	4	Y	15	Y	Y	QFN28
C8051T327-GM[3]	48	16k[1]	1280	Y	Y	Y	Y	Y	Y	2	4	Y	15	N	Y	QFN28

Notes:
1. 512 Bytes Reserved for Factory use.
2. Pin compatible with the C8051F326-GM.
3. Pin compatible with the C8051F327-GM.

3. Pin Definitions

Table 3.1. Pin Definitions for the C8051T622/3 and C8051T326/7

Name	Pin Number			Type	Description
	‘T622/3	‘T326	‘T327		
V_{DD}	6	6	6		Power Supply Voltage.
GND	2	2	3		Ground.
$\overline{RST}$/ C2CK	9	9	9	D I/O D I/O	Device Reset. Open-drain output of internal POR or V_{DD} monitor. An external source can initiate a system reset by driving this pin low for at least 10 µs. Clock signal for the C2 Debug Interface.
P2.0/ C2D	10	10	10	D I/O D I/O	Port 2.0. Bi-directional data signal for the C2 Debug Interface.
REGIN	7	7	7		5 V Regulator Input. This pin is the input to the on-chip voltage regulator.
VBUS	8	8	8	D In	VBUS Sense Input. This pin should be connected to the VBUS signal of a USB network. A 5 V signal on this pin indicates a USB network connection.
D+	3	3	4	D I/O	USB D+.
D-	4	4	5	D I/O	USB D–.
V_{IO}	5	5	-		V I/O Supply Voltage Input. The voltage at this pin must be less than or equal to the Core Supply Voltage (V_{DD}).
P0.0	1	1	2	D I/O or A In	Port 0.0.
P0.1	24	28	1	D I/O or A In	Port 0.1.
P0.2 XTAL1	23	27	28	D I/O or A In A In	Port 0.2. External Clock Input. This pin is the external oscillator return for a crystal or resonator. See Oscillator Section.

Table 3.1. Pin Definitions for the C8051T622/3 and C8051T326/7(Continued)

Name	Pin Number			Type	Description
	‘T622/3	‘T326	‘T327		
P0.3/	22	26	27	D I/O or A In	Port 0.3.
XTAL2				A Out D In A In	External Clock Output. This pin is the excitation driver for an external crystal or resonator. External Clock Input. This pin is the external clock input in external CMOS clock mode. External Clock Input. This pin is the external clock input in capacitor or RC oscillator configurations. See Oscillator Section for complete details.
P0.4	21	25	26	D I/O or A In	Port 0.4.
P0.5	20	24	25	D I/O or A In	Port 0.5.
P0.6/	19	23	24	D I/O or A In	Port 0.6.
P0.7/	18	22	23	D I/O or A In	Port 0.7
P1.0	17	19	19	D I/O or A In	Port 1.0.
P1.1/ V_{PP}	16	18	18	D I/O or A In A In	Port 1.1. V_{PP} Programming Supply Voltage
P1.2	15	17	17	D I/O or A In	Port 1.2.
P1.3	14	16	16	D I/O or A In	Port 1.3.
P1.4	13	12	12	D I/O or A In	Port 1.4.
P1.5	12	11	11	D I/O or A In	Port 1.5.
P1.6	11	—	—	D I/O or A In	Port 1.6.

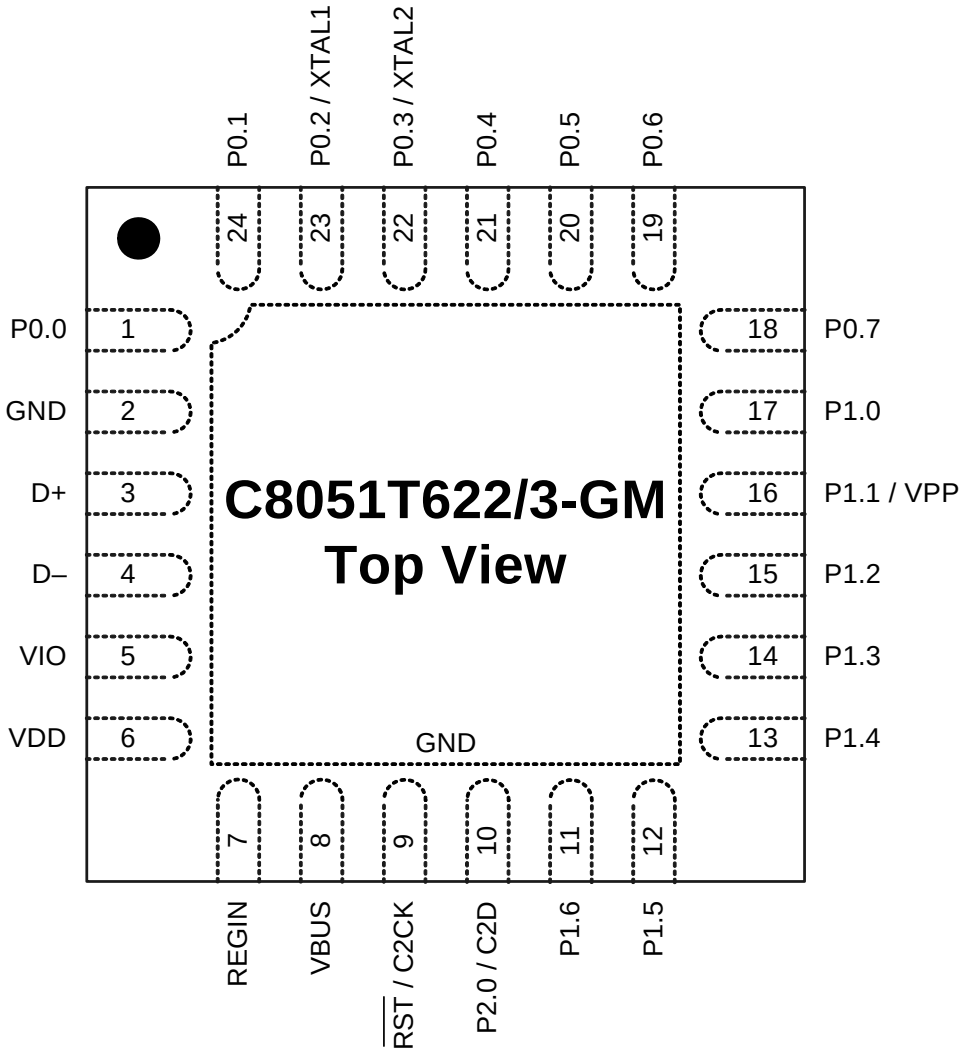

Figure 3.1. C8051T622/3 (QFN-24) Pinout Diagram (Top View)

)

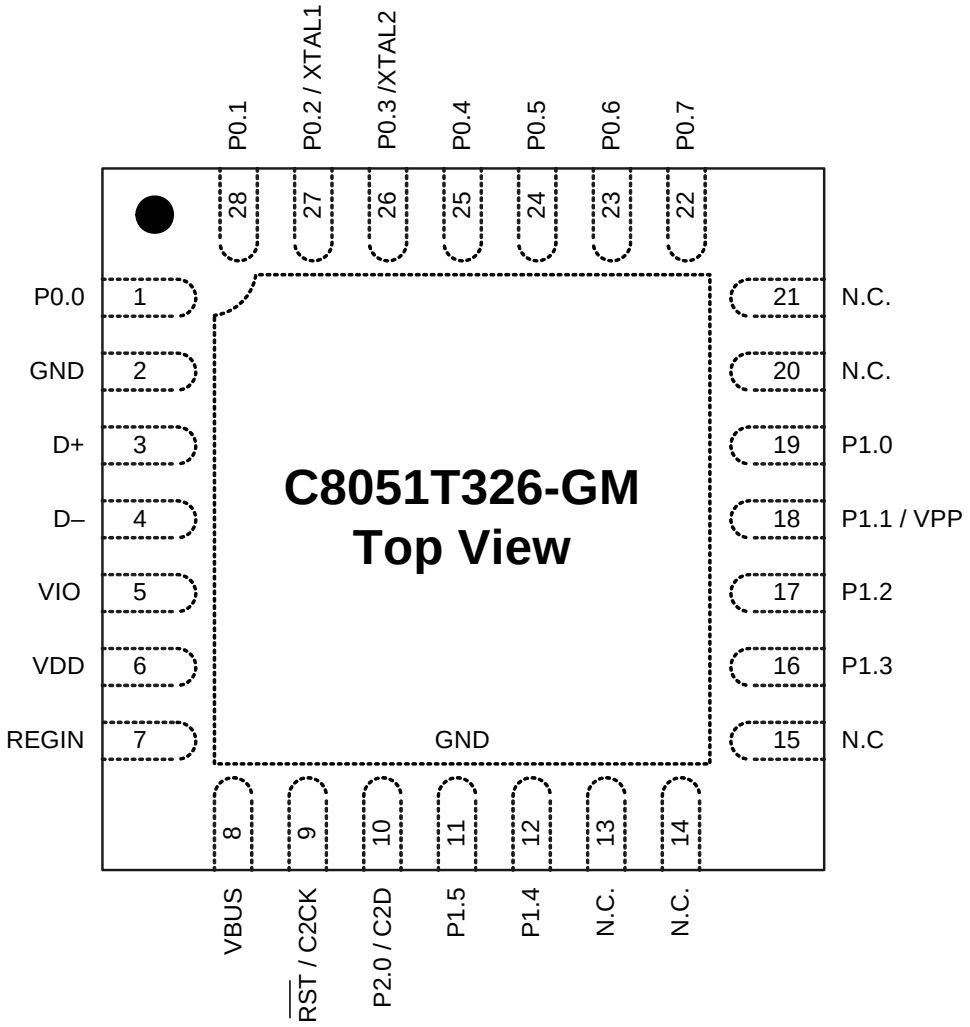

Figure 3.2. C8051T326 (QFN-28) Pinout Diagram (Top View)

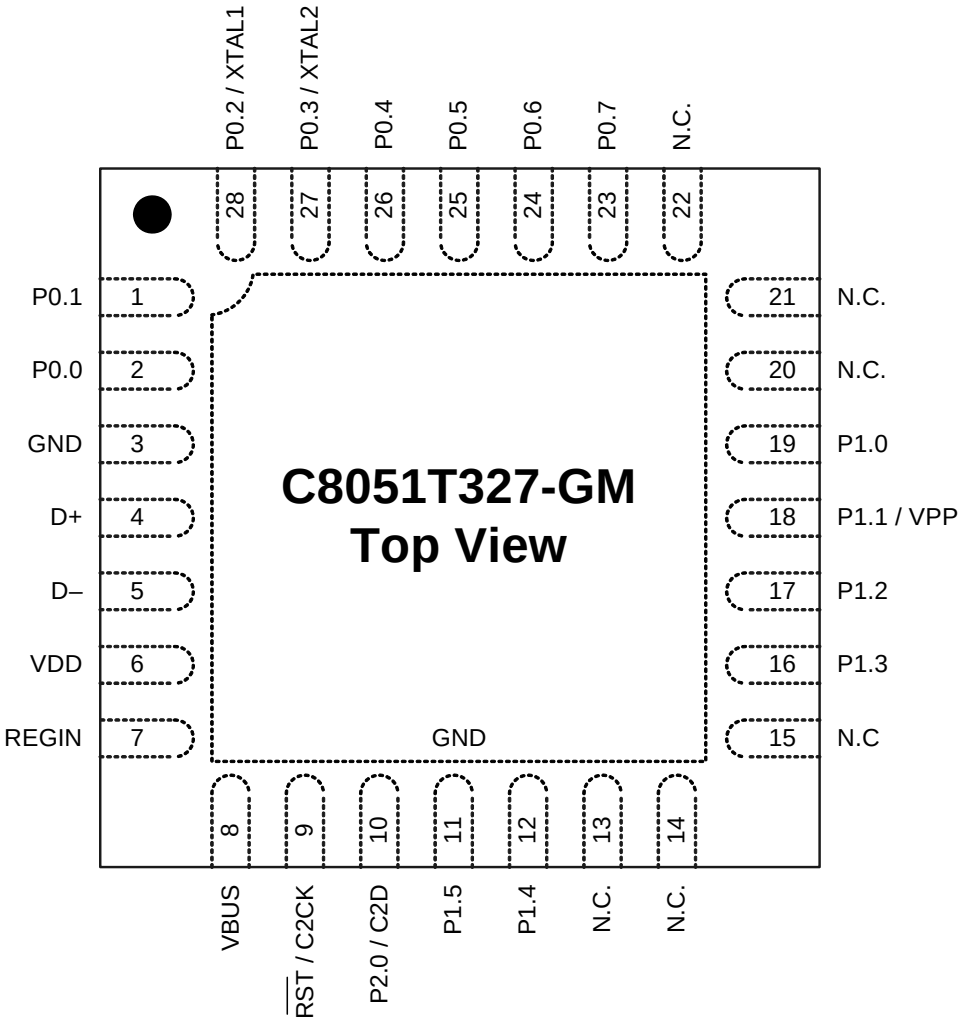

Figure 3.3. C8051T327 (QFN-28) Pinout Diagram (Top View)

4. QFN-24 Package Specifications

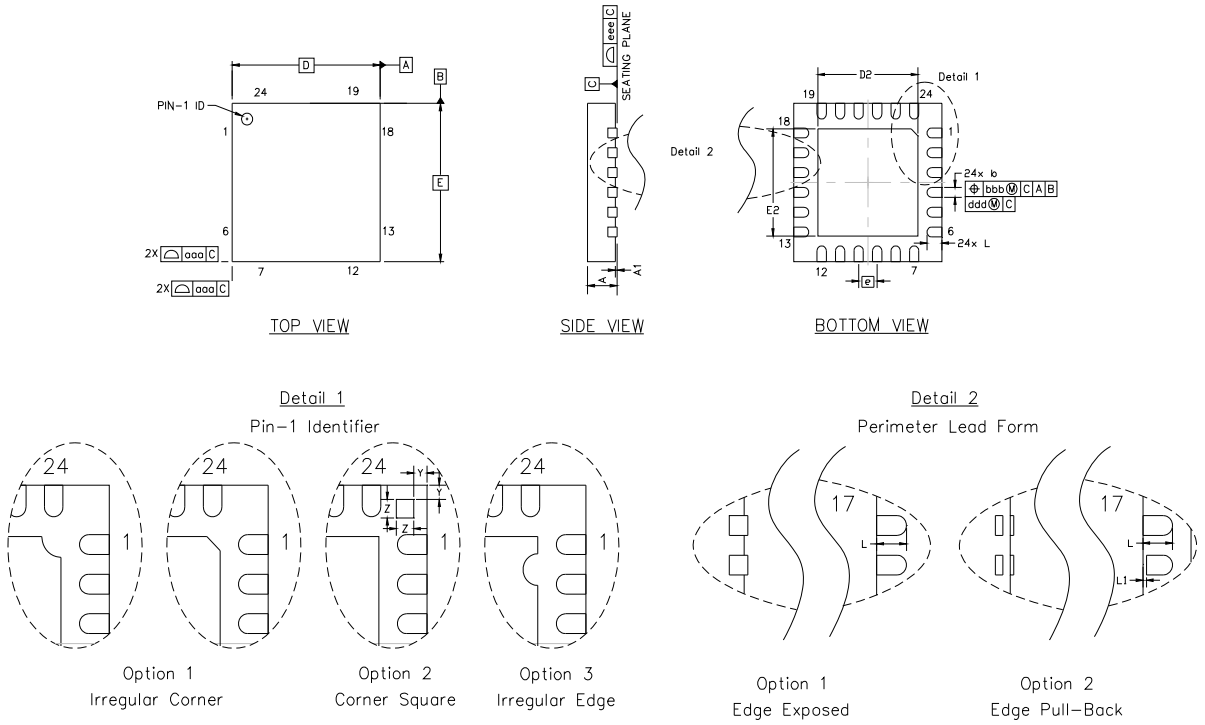

Figure 4.1. QFN-24 Package Drawing

Table 4.1. QFN-24 Package Dimensions

Dimension	Min	Typ	Max	Dimension	Min	Typ	Max
A	0.70	0.75	0.80	L	0.30	0.40	0.50
A1	0.00	0.02	0.05	L1	0.00	—	0.15
b	0.18	0.25	0.30	aaa	—	—	0.15
D	4.00 BSC.			bbb	—	—	0.10
D2	2.55	2.70	2.80	ddd	—	—	0.05
e	0.50 BSC.			eee	—	—	0.08
E	4.00 BSC.			Z	—	0.24	—
E2	2.55	2.70	2.80	Y	—	0.18	—

Notes:

1. All dimensions shown are in millimeters (mm) unless otherwise noted.
2. Dimensioning and Tolerancing per ANSI Y14.5M-1994.
3. This drawing conforms to JEDEC Solid State Outline MO-220, variation WGGD except for custom features D2, E2, Z, Y, and L which are toleranced per supplier designation.
4. Recommended card reflow profile is per the JEDEC/IPC J-STD-020 specification for Small Body Components.

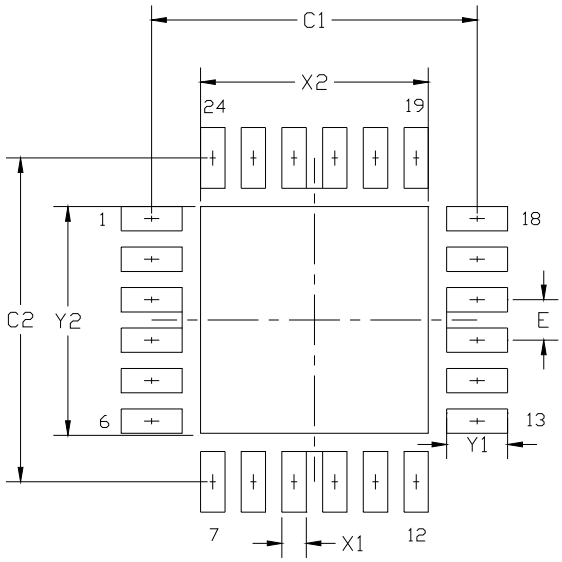

Figure 4.2. QFN-24 Recommended PCB Land Pattern

Table 4.2. QFN-24 PCB Land Pattern Dimesions

Dimension	Min	Max	Dimension	Min	Max
C1	3.90	4.00	X2	2.70	2.80
C2	3.90	4.00	Y1	0.65	0.75
E	0.50 BSC		Y2	2.70	2.80
X1	0.20	0.30			

Notes:

General

1. All dimensions shown are in millimeters (mm) unless otherwise noted.
2. This Land Pattern Design is based on the IPC-7351 guidelines.

Solder Mask Design

3. All metal pads are to be non-solder mask defined (NSMD). Clearance between the solder mask and the metal pad is to be 60 μm minimum, all the way around the pad.

Stencil Design

4. A stainless steel, laser-cut and electro-polished stencil with trapezoidal walls should be used to assure good solder paste release.
5. The stencil thickness should be 0.125 mm (5 mils).
6. The ratio of stencil aperture to land pad size should be 1:1 for all perimeter pads.
7. A 2x2 array of 1.10 mm x 1.10 mm openings on a 1.30 mm pitch should be used for the center pad.

Card Assembly

8. A No-Clean, Type-3 solder paste is recommended.
9. The recommended card reflow profile is per the JEDEC/IPC J-STD-020 specification for Small Body Components.

5. QFN-28 Package Specifications

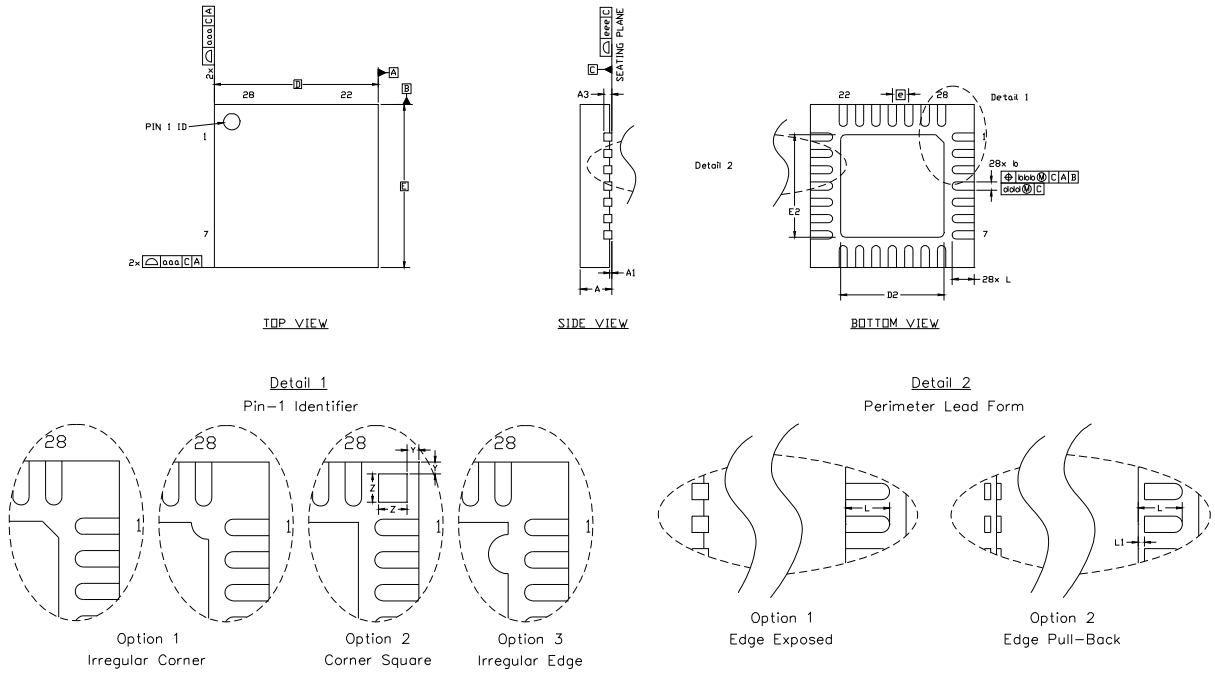

Figure 5.1. QFN-28 Package Drawing

Table 5.1. QFN-28 Package Dimensions

Dimension	Min	Typ	Max	Dimension	Min	Typ	Max
A	0.80	0.90	1.00	L	0.35	0.55	0.65
A1	0.00	0.02	0.05	L1	0.00	—	0.15
A3	0.25 REF			aaa	0.15		
b	0.18	0.23	0.30	bbb	0.10		
D	5.00 BSC.			ddd	0.05		
D2	2.90	3.15	3.35	eee	0.08		
e	0.50 BSC.			Z	0.44		
E	5.00 BSC.			Y	0.18		
E2	2.90	3.15	3.35				

Notes:

1. All dimensions shown are in millimeters (mm) unless otherwise noted.
2. Dimensioning and Tolerancing per ANSI Y14.5M-1994.
3. This drawing conforms to the JEDEC Solid State Outline MO-220, variation VHHD except for custom features D2, E2, Z, Y, and L which are toleranced per supplier designation.
4. Recommended card reflow profile is per the JEDEC/IPC J-STD-020 specification for Small Body Components.

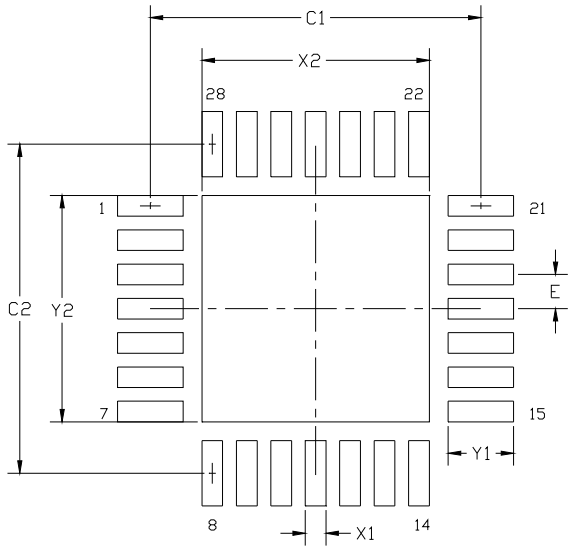

Figure 5.2. QFN-28 Recommended PCB Land Pattern

Table 5.2. QFN-28 PCB Land Pattern Dimensions

Dimension	Min	Max	Dimension	Min	Max
C1	4.80		X2	3.20	3.30
C2	4.80		Y1	0.85	0.95
E	0.50		Y2	3.20	3.30
X1	0.20	0.30			

Notes:

General

1. All dimensions shown are in millimeters (mm) unless otherwise noted.
2. Dimensioning and Tolerancing is per the ANSI Y14.5M-1994 specification.
3. This Land Pattern Design is based on the IPC-7351 guidelines.

Solder Mask Design

4. All metal pads are to be non-solder mask defined (NSMD). Clearance between the solder mask and the metal pad is to be 60 μm minimum, all the way around the pad.

Stencil Design

5. A stainless steel, laser-cut and electro-polished stencil with trapezoidal walls should be used to assure good solder paste release.
6. The stencil thickness should be 0.125 mm (5 mils).
7. The ratio of stencil aperture to land pad size should be 1:1 for all perimeter pins.
8. A 3x3 array of 0.90 mm openings on a 1.1mm pitch should be used for the center pad to assure the proper paste volume (67% Paste Coverage).

Card Assembly

9. A No-Clean, Type-3 solder paste is recommended.
10. The recommended card reflow profile is per the JEDEC/IPC J-STD-020 specification for Small Body Components.

6. Electrical Characteristics

6.1. Absolute Maximum Specifications

Table 6.1. Absolute Maximum Ratings

Parameter	Conditions	Min	Typ	Max	Units
Ambient temperature under bias		–55	—	125	°C
Storage Temperature		–65	—	150	°C
Voltage on $\overline{RST}$ or any Port I/O Pin (except V_{PP} during programming) with respect to GND	$V_{DD} \geq 2.2$ V $V_{DD} < 2.2$ V	–0.3 –0.3	— —	5.8 V_{DD} + 3.6	V V
Voltage on V_{PP} with respect to GND during a programming operation	$V_{DD} \geq 2.4$ V	–0.3	—	7.0	V
Duration of High-voltage on V_{PP} pin (cumulative)	$V_{PP} > (V_{DD} + 3.6$ V)	—	—	10	s
Voltage on V_{DD} with respect to GND	Regulator1 in Normal Mode Regulator1 in Bypass Mode	–0.3 –0.3	— —	4.2 1.98	V V
Maximum Total current through V_{DD}, V_{IO}, REGIN, or GND		—	—	500	mA
Maximum output current sunk by $\overline{RST}$ or any Port pin		—	—	100	mA

Note: Stresses above those listed under “Absolute Maximum Ratings” may cause permanent damage to the device. This is a stress rating only and functional operation of the devices at those or any other conditions above those indicated in the operation listings of this specification is not implied. Exposure to maximum rating conditions for extended periods may affect device reliability.

6.2. Electrical Characteristics

Table 6.2. Global Electrical Characteristics

–40 to +85 °C, 25 MHz system clock unless otherwise specified.

Parameter	Conditions	Min	Typ	Max	Units
Supply Voltage (Note 1)	Regulator1 in Normal Mode Regulator1 in Bypass Mode	1.8 1.75	3.0 —	3.6 1.9	V V
Digital Supply Current with CPU Active	V_{DD} = 1.8 V, Clock = 48 MHz V_{DD} = 1.8 V, Clock = 1 MHz V_{DD} = 3.45 V, Clock = 48 MHz V_{DD} = 3.45 V, Clock = 1 MHz V_{DD} = 3.6 V, Clock = 48 MHz V_{DD} = 3.6 V, Clock = 1 MHz	— — — — — —	8.8 1.5 10.9 1.6 11 1.7	11.0 — 14.0 — 14.1 —	mA mA mA mA mA mA
Digital Supply Current with CPU Inactive (not accessing EPROM)	V_{DD} = 1.8 V, Clock = 48 MHz V_{DD} = 1.8 V, Clock = 1 MHz V_{DD} = 3.45 V, Clock = 48 MHz V_{DD} = 3.45 V, Clock = 1 MHz V_{DD} = 3.6 V, Clock = 48 MHz V_{DD} = 3.6 V, Clock = 1 MHz	— — — — — —	4 0.45 4.5 0.48 4.6 0.5	5.5 — 5.9 — 6.0 —	mA mA mA mA mA mA
Digital Supply Current (shutdown)	Oscillator not running (stop mode), Internal Regulator Off	—	.2	—	µA
	Oscillator not running (stop or suspend mode), Internal Regulator On	—	440	—	µA
Digital Supply Current for USB Module (USB Active Mode)	V_{DD} = 3.6 V, USB Clock = 48 MHz V_{DD} = 3.45 V, USB Clock = 48 MHz	— —	11.8 11.4	— —	mA mA
Digital Supply Current for USB Module (USB Suspend Mode)	Oscillator not running V_{DD} monitor disabled	—	60	—	µA
Digital Supply RAM Data Retention Voltage		—	1.5	—	V
Specified Operating Temperature Range		–40	—	+85	°C
SYSCLK (System Clock) (Note 2)		0	—	48	MHz
Tsysl (SYSCLK low time)		9.75	—	—	ns
Tsysh (SYSCLK high time)		9.75	—	—	ns

Notes:
1. Analog performance is not guaranteed when V_{DD} is below 1.8 V.
2. SYSCLK must be at least 32 kHz to enable debugging.

Table 6.3. Port I/O DC Electrical Characteristics

V_{DD} = 1.8 to 3.6 V, –40 to +85 °C unless otherwise specified.

Parameters	Conditions	Min	Typ	Max	Units
Output High Voltage	I_{OH} = –10 µA, Port I/O push-pull I_{OH} = –3 mA, Port I/O push-pull I_{OH} = –10 mA, Port I/O push-pull	V_{IO} – 0.1 V_{IO} – 0.2 —	— — V_{IO} – 0.4	— — —	V
Output Low Voltage	I_{OL} = 10 µA I_{OL} = 8.5 mA I_{OL} = 25 mA	— — —	— — 0.6	0.1 0.4 —	V
Input High Voltage		0.7 x V_{IO}	—	—	V
Input Low Voltage		—	—	0.6	V
Input Leakage Current	Weak Pullup Off Weak Pullup On, V_{IN} = 0 V	–1 —	— 25	+1 50	µA

Table 6.4. Reset Electrical Characteristics

–40 to +85 °C unless otherwise specified.

Parameter	Conditions	Min	Typ	Max	Units
$\overline{RST}$ Output Low Voltage	I_{OL} = 8.5 mA, V_{DD} = 1.8 V to 3.6 V	—	—	0.6	V
$\overline{RST}$ Input High Voltage		0.75 x V_{IO}	—	—	V
$\overline{RST}$ Input Low Voltage		—	—	0.6	V
$\overline{RST}$ Input Pullup Current	$\overline{RST}$ = 0.0 V	—	25	50	µA
V_{DD} POR Threshold (V_{RST})		1.7	1.75	1.8	V
Missing Clock Detector Time-out	Time from last system clock rising edge to reset initiation	500	625	750	µs
Reset Time Delay	Delay between release of any reset source and code execution at location 0x0000	—	—	60	µs
Minimum $\overline{RST}$ Low Time to Generate a System Reset		15	—	—	µs
V_{DD} Monitor Turn-on Time	V_{DD} = V_{RST} – 0.1 v	—	50	—	µs
V_{DD} Monitor Supply Current		—	20	30	µA

Table 6.5. Internal Voltage Regulator Electrical Characteristics
–40 to +85 °C unless otherwise specified.

Parameter	Conditions	Min	Typ	Max	Units
Voltage Regulator (REG0)					
Input Voltage Range[1, 3]		2.7	—	5.25	V
Output Voltage (V_{DD})[2]	Output Current = 1 to 100 mA	3.3	3.45	3.6	V
Output Current[2]		—	—	100	mA
VBUS Detection Input Threshold		2.5	—	—	V
Bias Current	Normal Mode (REG0MD = 0) Low Power Mode (REG0MD = 1)	— —	83 43	99 55	µA
Dropout Voltage (V_{DO})[3]	I_{DD} = 1 mA I_{DD} = 100 mA	— —	1 100	— —	mV/mA
Voltage Regulator (REG1)					
Input Voltage Range		1.8	—	3.6	V
Bias Current	Normal Mode (REG1MD = 0) Low Power Mode (REG1MD = 1)	— —	340 —	425 185	µA

Notes:
1. Input range specified for regulation. When an external regulator is used, should be tied to V_{DD}.
2. Output current is total regulator output, including any current required by the C8051T622/3 and C8051T326/7.
3. The minimum input voltage is 2.7 V or V_{DD} + V_{DO} (max load), whichever is greater.

Table 6.6. EPROM Electrical Characteristics

Parameter	Conditions	Min	Typ	Max	Units
EPROM Size	C8051T622/326/327 (Note 1) C8051T623	16384 8192	— —	— —	Bytes
Write Cycle Time (per Byte) (Note 2)		105	155	205	µs
In-Application Programming Write Cycle Time (per Byte) (Note 3)	Capacitor on V_{PP} = 4.7 µF and fully discharged Capacitor on V_{PP} = 4.7 µF and initially charged to 3.3 V	— —	37 26	— —	ms ms
Programming Voltage (V_{PP})		5.75	6.0	6.25	V
Capacitor on V_{PP} for In-application Programming		—	4.7	—	µF

Notes:
1. 512 bytes at location 0x3E00 to 0x3FFF are not available for program storage
2. For devices with a Date Code prior to 1111, the programming time over the C2 interface is twice as long.
3. Duration of write time is largely dependent on VIO voltage, supply voltage, and residual charge on the VPP capacitor. The majority of the write time consists of charging the voltage on VPP to 6.0 V. These measurements include the VPP ramp time and VDD = VIO = 3.3 V

Table 6.7. Internal High-Frequency Oscillator Electrical Characteristics

V_{DD} = 2.7 to 3.6 V; T_A = –40 to +85 °C unless otherwise specified; Using factory-calibrated settings.

Parameter	Conditions	Min	Typ	Max	Units
Oscillator Frequency	IFCN = 11b	47.28	48	48.72	MHz
Oscillator Supply Current (from V_{DD})	25 °C, V_{DD} = 3.0 V, OSCICN.7 = 1, OSCICN.5 = 0	—	900	1000	µA
Power Supply Sensitivity	Constant Temperature	—	±0.02	—	% / V
Temperature Sensitivity	Constant Supply	—	±20	—	ppm / °C
Note: Represents mean ±1 standard deviation.					

Table 6.8. Internal Low-Frequency Oscillator Electrical Characteristics

V_{DD} = 2.7 to 3.6 V; T_A = –40 to +85 °C unless otherwise specified; Using factory-calibrated settings.

Parameter	Conditions	Min	Typ	Max	Units
Oscillator Frequency	OSCLD = 11b	72	80	88	kHz
Oscillator Supply Current (from V_{DD})	25 °C, V_{DD} = 3.0 V, OSCLCN.7 = 1	—	3	6	µA
Power Supply Sensitivity	Constant Temperature	—	±0.09	—	%/V
Temperature Sensitivity	Constant Supply	—	±30	—	ppm/°C
Note: Represents mean ±1 standard deviation.					

Table 6.9. External Oscillator Electrical Characteristics

V_{DD} = 2.7 to 3.6 V; T_A = –40 to +85 °C unless otherwise specified.

Parameter	Conditions	Min	Typ	Max	Units
External Crystal Frequency		.02	—	30	MHz
External CMOS Oscillator Frequency		0	—	48	MHz

Table 6.10. USB Transceiver Electrical Characteristic

V_{DD} = 3.0 V to 3.6 V, –40 to +85 °C unless otherwise specified.

Parameter	Conditions	Min	Typ	Max	Units
Transmitter					
Output High Voltage (V_{OH})		2.8	—	—	V
Output Low Voltage (V_{OL})		—	—	0.8	V
Output Crossover Point (V_{CRS})		1.3	—	2.0	V
Output Impedance (Z_{DRV})	Driving High Driving Low	— —	36 36	— —	Ω
Pull-up Resistance (R_{PU})	Full Speed (D+ Pull-up) Low Speed (D- Pull-up)	1.425	1.5	1.575	kΩ
Output Rise Time (T_R)	Low Speed Full Speed	75 4	— —	300 20	ns
Output Fall Time (T_F)	Low Speed Full Speed	75 4	— —	300 20	ns
Receiver					
Differential Input Sensitivity (V_{DI})	| (D+) - (D-) |	0.2	—	—	V
Differential Input Common Mode Range (V_{CM})		0.8	—	2.5	V
Input Leakage Current (I_L)	Pullups Disabled	—	<1.0	—	µA
Note: Refer to the USB Specification for timing diagrams and symbol definitions.					

6.3. Typical Performance Curves

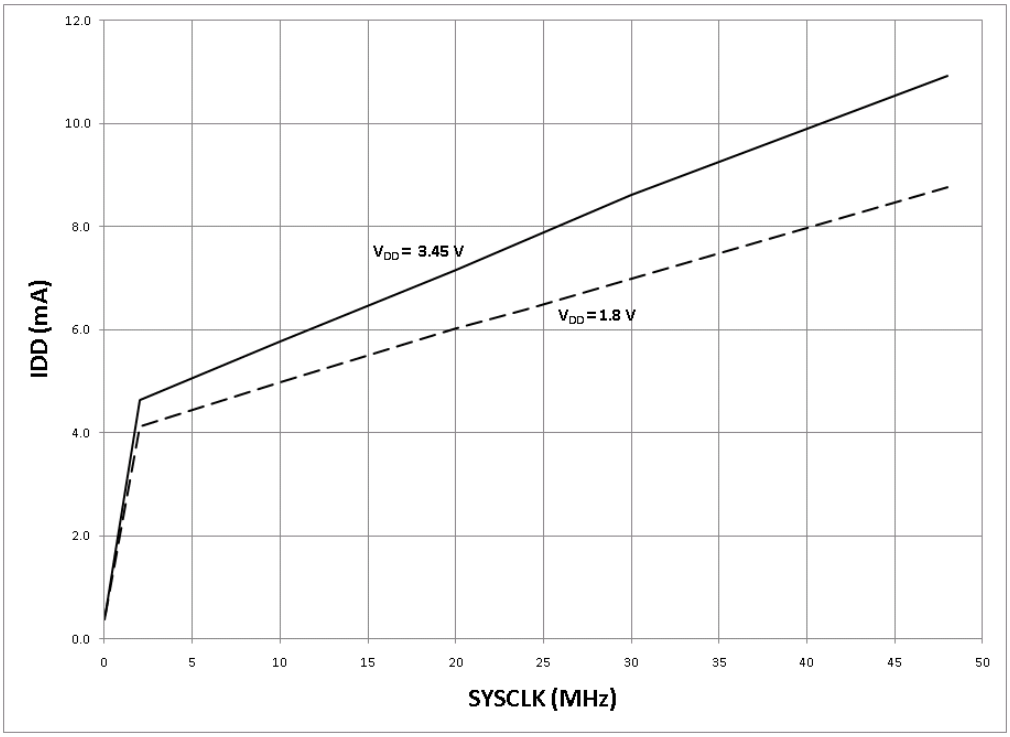

Figure 6.1. Normal Mode Digital Supply Current vs. Frequency (MPCE = 1)

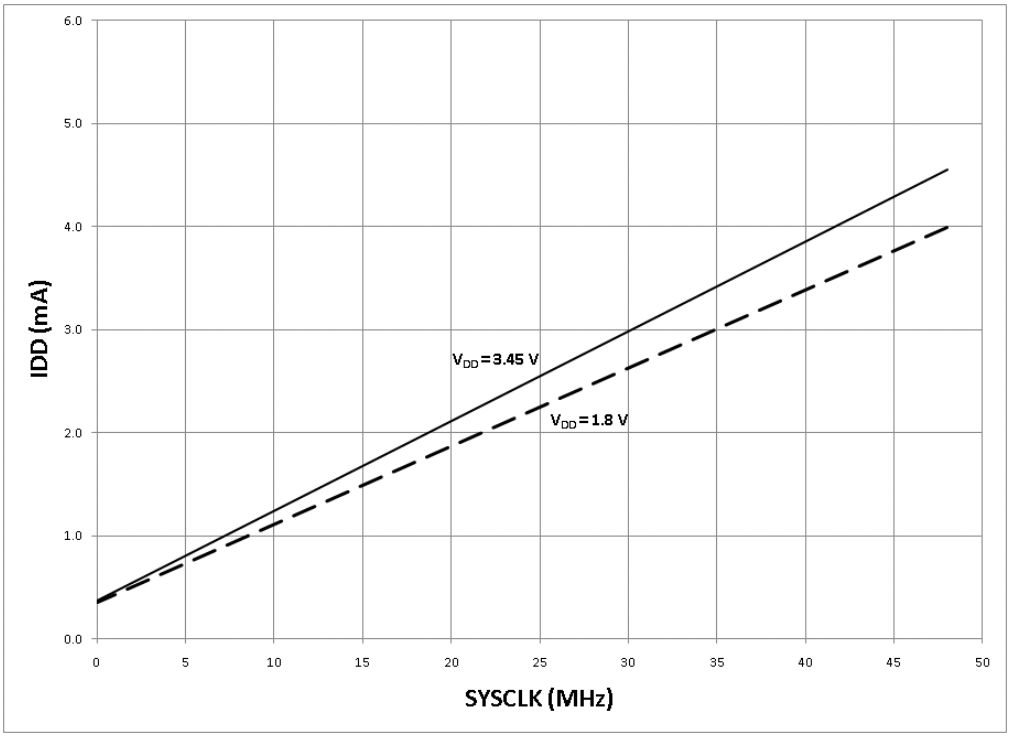

Figure 6.2. Idle Mode Digital Supply Current vs. Frequency (MPCE = 1)

7. Voltage Regulators (REG0 and REG1)

C8051T622/3 and C8051T326/7 devices include two internal voltage regulators: one regulates a voltage source on REGIN to 3.45 V (REG0), and the other regulates the internal core supply to 1.8 V from a V_{DD} supply of 1.8 to 3.6 V (REG1). When enabled, the REG0 output appears on the V_{DD} pin and can be used to power external devices. REG0 can be enabled/disabled by software using bit REG0DIS in register REG01CN (SFR Definition 7.1). REG1 has two power-saving modes built into the regulator to help reduce current consumption in low-power applications. These modes are accessed through the REG01CN register. Electrical characteristics for the on-chip regulators are specified in Table 6.5 on page 31.

Note that the VBUS signal must be connected to the VBUS pin when using the device in a USB network. The VBUS signal should only be connected to the REGIN pin when operating the device as a bus-powered function. REG0 configuration options are shown in Figure 7.1–Figure 7.4.

7.1. Voltage Regulator (REG0)

7.1.1. Regulator Mode Selection

REG0 offers a low power mode intended for use when the device is in suspend mode. In this low power mode, the REG0 output remains as specified; however the REG0 dynamic performance (response time) is degraded. See Table 6.5 for normal and low power mode supply current specifications. The REG0 mode selection is controlled via the REG0MD bit in register REG01CN.

7.1.2. VBUS Detection

When the USB Function Controller is used (see section Section “18. Universal Serial Bus Controller (USB0)” on page 116), the VBUS signal should be connected to the VBUS pin. The VBSTAT bit (register REG01CN) indicates the current logic level of the VBUS signal. If enabled, a VBUS interrupt will be generated when the VBUS signal has either a falling or rising edge. The VBUS interrupt is edge-sensitive, and has no associated interrupt pending flag. See Table 6.5 for VBUS input parameters.

Important Note: When USB is selected as a reset source, a system reset will be generated when a falling or rising edge occurs on the VBUS pin. See Section “15. Reset Sources” on page 80 for details on selecting USB as a reset source.

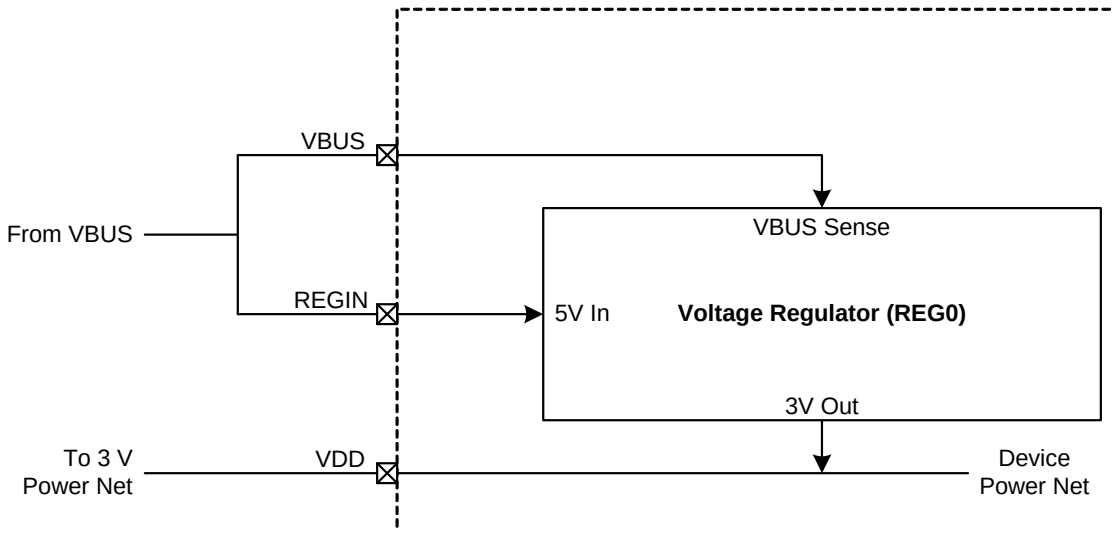

Figure 7.1. REG0 Configuration: USB Bus-Powered

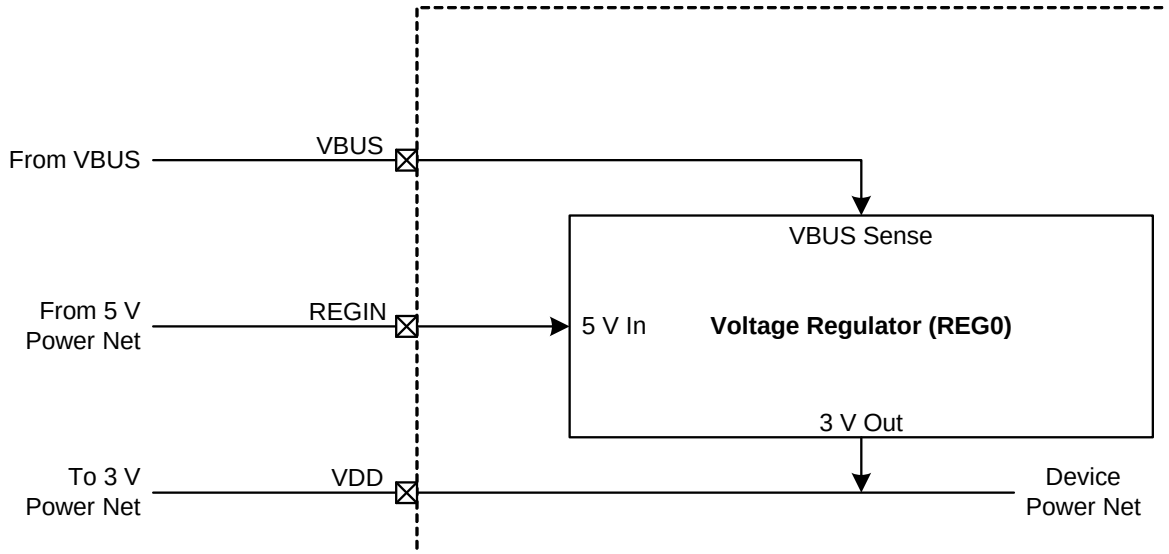

Figure 7.2. REG0 Configuration: USB Self-Powered

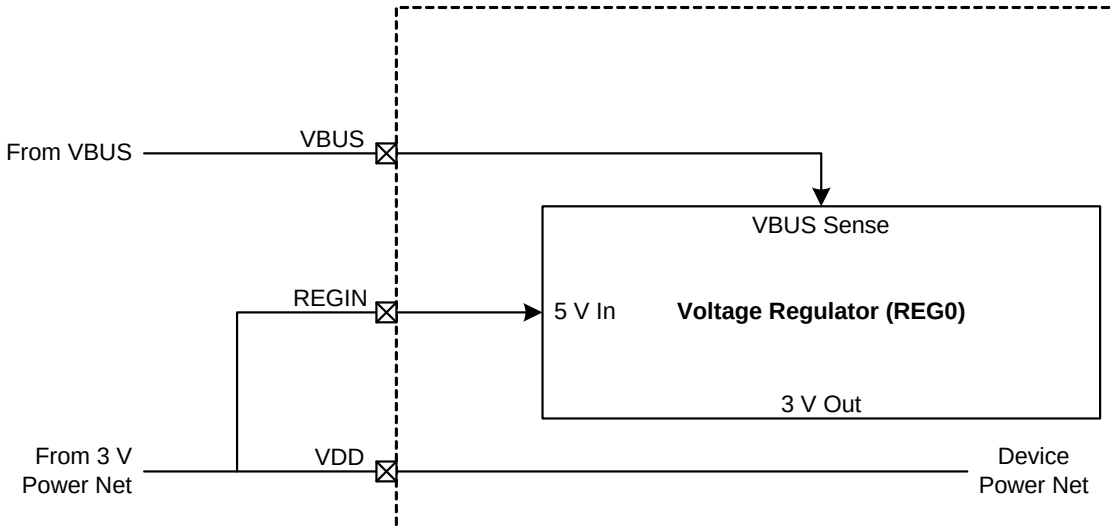

Figure 7.3. REG0 Configuration: USB Self-Powered, Regulator Disabled

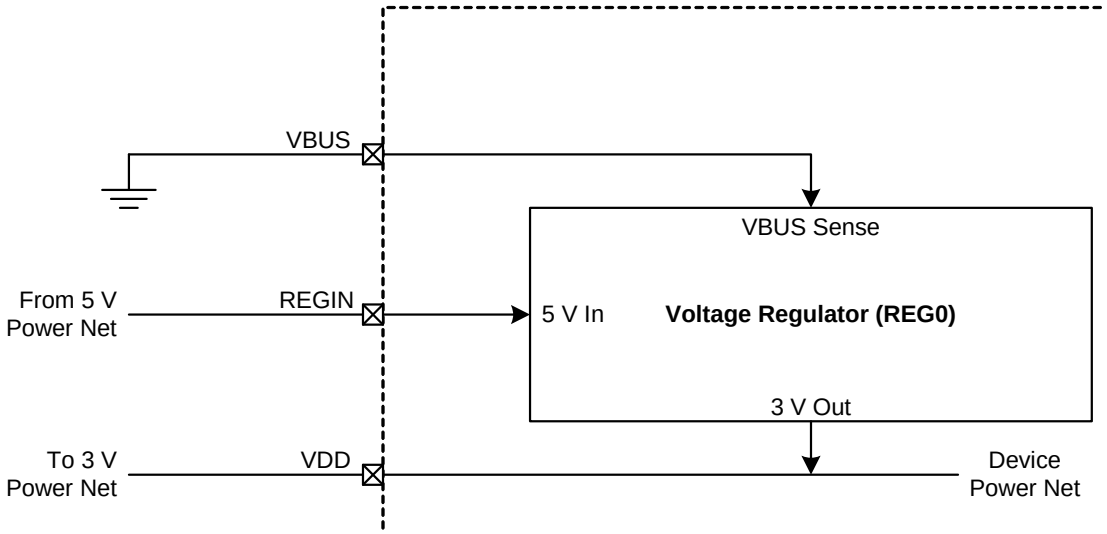

Figure 7.4. REG0 Configuration: No USB Connection

7.2. Voltage Regulator (REG1)

Under default conditions, the internal REG1 regulator will remain on when the device enters STOP mode. This allows any enabled reset source to generate a reset for the device and bring the device out of STOP mode. For additional power savings, the STOPCF bit can be used to shut down the regulator and the internal power network of the device when the part enters STOP mode. When STOPCF is set to 1, the $\overline{RST}$ pin and a full power cycle of the device are the only methods of generating a reset.

REG1 offers an additional low power mode intended for use when the device is in suspend mode. This low power mode should not be used during normal operation or if the REG0 Voltage Regulator is disabled. See Table 6.5 for normal and low power mode supply current specifications. The REG1 mode selection is controlled via the REG1MD bit in register REG01CN.

Important Note: At least 12 clock instructions must occur after placing REG1 in low power mode before the Internal High Frequency Oscillator is Suspended (OSCICN.5 = 1b).

SFR Definition 7.1. REG01CN: Voltage Regulator Control

Bit	7	6	5	4	3	2	1	0
Name	REG0DIS	VBSTAT	Reserved	REG0MD	STOPCF	Reserved	REG1MD	MPCE
Type	R/W	R	R/W	R/W	R/W	R/W	R/W	R/W
Reset	0	0	0	0	0	0	0	0

SFR Address = 0xC9

Bit	Name	Function
7	REG0DIS	**Voltage Regulator (REG0) Disable.** This bit enables or disables the REG0 Voltage Regulator. 0: Voltage Regulator Enabled. 1: Voltage Regulator Disabled.
6	VBSTAT	**VBUS Signal Status.** This bit indicates whether the device is connected to a USB network. 0: VBUS signal currently absent (device not attached to USB network). 1: VBUS signal currently present (device attached to USB network).
5	Reserved	Must Write 0b.
4	REG0MD	**Voltage Regulator (REG0) Mode Select.** This bit selects the Voltage Regulator mode for REG0. When REG0MD is set to 1, the REG0 voltage regulator operates in lower power (suspend) mode. 0: REG0 Voltage Regulator in normal mode. 1: REG0 Voltage Regulator in low power mode.
3	STOPCF	**Stop Mode Configuration (REG1).** This bit configures the REG1 regulator's behavior when the device enters STOP mode. 0: REG1 Regulator is still active in STOP mode. Any enabled reset source will reset the device. 1: REG1 Regulator is shut down in STOP mode. Only the $\overline{\text{RST}}$ pin or power cycle can reset the device.
2	Reserved	Must Write 0b.
1	REG1MD	**Voltage Regulator (REG1) Mode.** This bit selects the Voltage Regulator mode for REG1. When REG1MD is set to 1, the REG1 voltage regulator operates in lower power mode. 0: REG1 Voltage Regulator in normal mode. 1: REG1 Voltage Regulator in low power mode. **Note:** This bit should not be set to '1' if the REG0 Voltage Regulator is disabled.
0	MPCE	**Memory Power Controller Enable.** This bit can help the system save power at slower system clock frequencies (about 2.0 MHz or less) by automatically shutting down the EPROM memory between clocks when information is not being fetched from the EPROM memory. This bit has no effect when the prefetch engine is enabled. 0: Normal Mode - Memory power controller disabled (EPROM memory is always on). 1: Low Power Mode - Memory power controller enabled (EPROM turns on/off as needed). **Note:** If an external clock source is used with the Memory Power Controller enabled, and the clock frequency changes from slow (< 2.0 MHz) to fast (> 2.0 MHz), up to 20 clocks may be "skipped" to ensure that the EPROM power is stable before reading memory.

8. CIP-51 Microcontroller

The MCU system controller core is the CIP-51 microcontroller. The CIP-51 is fully compatible with the MCS-51™ instruction set; standard 803x/805x assemblers and compilers can be used to develop software. The MCU family has a superset of all the peripherals included with a standard 8051. The CIP-51 also includes on-chip debug hardware (see description in Section 25), and interfaces directly with the analog and digital subsystems providing a complete data acquisition or control-system solution in a single integrated circuit.

The CIP-51 Microcontroller core implements the standard 8051 organization and peripherals as well as additional custom peripherals and functions to extend its capability (see Figure 8.1 for a block diagram). The CIP-51 includes the following features:

- Fully Compatible with MCS-51 Instruction Set
- 48 MIPS Peak Throughput with 48 MHz Clock
- 0 to 48 MHz Clock Frequency
- Extended Interrupt Handler
- Reset Input
- Power Management Modes
- On-chip Debug Logic
- Program and Data Memory Security

Performance

The CIP-51 employs a pipelined architecture that greatly increases its instruction throughput over the standard 8051 architecture. In a standard 8051, all instructions except for MUL and DIV take 12 or 24 system clock cycles to execute, and usually have a maximum system clock of 12 MHz. By contrast, the CIP-51 core executes 70% of its instructions in one or two system clock cycles, with no instructions taking more than eight system clock cycles.

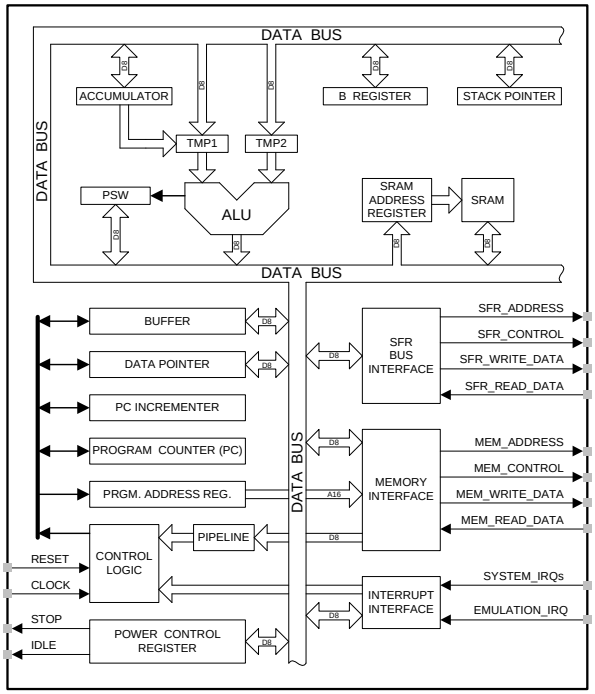

Figure 8.1. CIP-51 Block Diagram

With the CIP-51's maximum system clock at 48 MHz, it has a peak throughput of 48 MIPS. The CIP-51 has a total of 109 instructions. The table below shows the total number of instructions that require each execution time.

Clocks to Execute	1	2	2/4	3	3/5	4	5	4/6	6	8
Number of Instructions	26	50	5	10	7	5	2	1	2	1

Programming and Debugging Support

In-system programming of the EPROM program memory and communication with on-chip debug support logic is accomplished via the Silicon Labs 2-Wire Development Interface (C2).

The on-chip debug support logic facilitates full speed in-circuit debugging, allowing the setting of hardware breakpoints, starting, stopping and single stepping through program execution (including interrupt service routines), examination of the program's call stack, and reading/writing the contents of registers and memory. This method of on-chip debugging is completely non-intrusive, requiring no RAM, Stack, timers, or other on-chip resources. C2 details can be found in Section “25. C2 Interface” on page 244.

The CIP-51 is supported by development tools from Silicon Labs and third party vendors. Silicon Labs provides an integrated development environment (IDE) including editor, debugger and programmer. The IDE's debugger and programmer interface to the CIP-51 via the C2 interface to provide fast and efficient in-system device programming and debugging. Third party macro assemblers and C compilers are also available.

8.1. Instruction Set

The instruction set of the CIP-51 System Controller is fully compatible with the standard MCS-51™ instruction set. Standard 8051 development tools can be used to develop software for the CIP-51. All CIP-51 instructions are the binary and functional equivalent of their MCS-51™ counterparts, including opcodes, addressing modes and effect on PSW flags. However, instruction timing is different than that of the standard 8051.

8.1.1. Instruction and CPU Timing

In many 8051 implementations, a distinction is made between machine cycles and clock cycles, with machine cycles varying from 2 to 12 clock cycles in length. However, the CIP-51 implementation is based solely on clock cycle timing. All instruction timings are specified in terms of clock cycles.

Due to the pipelined architecture of the CIP-51, most instructions execute in the same number of clock cycles as there are program bytes in the instruction. Conditional branch instructions take one less clock cycle to complete when the branch is not taken as opposed to when the branch is taken. Table 8.1 is the CIP-51 Instruction Set Summary, which includes the mnemonic, number of bytes, and number of clock cycles for each instruction.

Table 8.1. CIP-51 Instruction Set Summary

Mnemonic	Description	Bytes	Clock Cycles
Arithmetic Operations			
ADD A, Rn	Add register to A	1	1
ADD A, direct	Add direct byte to A	2	2
ADD A, @Ri	Add indirect RAM to A	1	2
ADD A, #data	Add immediate to A	2	2
ADDC A, Rn	Add register to A with carry	1	1
ADDC A, direct	Add direct byte to A with carry	2	2
ADDC A, @Ri	Add indirect RAM to A with carry	1	2
ADDC A, #data	Add immediate to A with carry	2	2
SUBB A, Rn	Subtract register from A with borrow	1	1
SUBB A, direct	Subtract direct byte from A with borrow	2	2
SUBB A, @Ri	Subtract indirect RAM from A with borrow	1	2
SUBB A, #data	Subtract immediate from A with borrow	2	2
INC A	Increment A	1	1
INC Rn	Increment register	1	1
INC direct	Increment direct byte	2	2
INC @Ri	Increment indirect RAM	1	2
DEC A	Decrement A	1	1
DEC Rn	Decrement register	1	1
DEC direct	Decrement direct byte	2	2
DEC @Ri	Decrement indirect RAM	1	2
INC DPTR	Increment Data Pointer	1	1
MUL AB	Multiply A and B	1	4
DIV AB	Divide A by B	1	8
DA A	Decimal adjust A	1	1
Logical Operations			
ANL A, Rn	AND Register to A	1	1
ANL A, direct	AND direct byte to A	2	2
ANL A, @Ri	AND indirect RAM to A	1	2
ANL A, #data	AND immediate to A	2	2
ANL direct, A	AND A to direct byte	2	2
ANL direct, #data	AND immediate to direct byte	3	3
ORL A, Rn	OR Register to A	1	1
ORL A, direct	OR direct byte to A	2	2
ORL A, @Ri	OR indirect RAM to A	1	2
ORL A, #data	OR immediate to A	2	2
ORL direct, A	OR A to direct byte	2	2
ORL direct, #data	OR immediate to direct byte	3	3
XRL A, Rn	Exclusive-OR Register to A	1	1
XRL A, direct	Exclusive-OR direct byte to A	2	2
XRL A, @Ri	Exclusive-OR indirect RAM to A	1	2
XRL A, #data	Exclusive-OR immediate to A	2	2
XRL direct, A	Exclusive-OR A to direct byte	2	2

Table 8.1. CIP-51 Instruction Set Summary(Continued)

Mnemonic	Description	Bytes	Clock Cycles
XRL direct, #data	Exclusive-OR immediate to direct byte	3	3
CLR A	Clear A	1	1
CPL A	Complement A	1	1
RL A	Rotate A left	1	1
RLC A	Rotate A left through Carry	1	1
RR A	Rotate A right	1	1
RRC A	Rotate A right through Carry	1	1
SWAP A	Swap nibbles of A	1	1
Data Transfer			
MOV A, Rn	Move Register to A	1	1
MOV A, direct	Move direct byte to A	2	2
MOV A, @Ri	Move indirect RAM to A	1	2
MOV A, #data	Move immediate to A	2	2
MOV Rn, A	Move A to Register	1	1
MOV Rn, direct	Move direct byte to Register	2	2
MOV Rn, #data	Move immediate to Register	2	2
MOV direct, A	Move A to direct byte	2	2
MOV direct, Rn	Move Register to direct byte	2	2
MOV direct, direct	Move direct byte to direct byte	3	3
MOV direct, @Ri	Move indirect RAM to direct byte	2	2
MOV direct, #data	Move immediate to direct byte	3	3
MOV @Ri, A	Move A to indirect RAM	1	2
MOV @Ri, direct	Move direct byte to indirect RAM	2	2
MOV @Ri, #data	Move immediate to indirect RAM	2	2
MOV DPTR, #data16	Load DPTR with 16-bit constant	3	3
MOVC A, @A+DPTR	Move code byte relative DPTR to A	1	3
MOVC A, @A+PC	Move code byte relative PC to A	1	3
MOVX A, @Ri	Move external data (8-bit address) to A	1	3
MOVX @Ri, A	Move A to external data (8-bit address)	1	3
MOVX A, @DPTR	Move external data (16-bit address) to A	1	3
MOVX @DPTR, A	Move A to external data (16-bit address)	1	3
PUSH direct	Push direct byte onto stack	2	2
POP direct	Pop direct byte from stack	2	2
XCH A, Rn	Exchange Register with A	1	1
XCH A, direct	Exchange direct byte with A	2	2
XCH A, @Ri	Exchange indirect RAM with A	1	2
XCHD A, @Ri	Exchange low nibble of indirect RAM with A	1	2
Boolean Manipulation			
CLR C	Clear Carry	1	1
CLR bit	Clear direct bit	2	2
SETB C	Set Carry	1	1
SETB bit	Set direct bit	2	2
CPL C	Complement Carry	1	1
CPL bit	Complement direct bit	2	2

Table 8.1. CIP-51 Instruction Set Summary(Continued)

Mnemonic	Description	Bytes	Clock Cycles
ANL C, bit	AND direct bit to Carry	2	2
ANL C, /bit	AND complement of direct bit to Carry	2	2
ORL C, bit	OR direct bit to carry	2	2
ORL C, /bit	OR complement of direct bit to Carry	2	2
MOV C, bit	Move direct bit to Carry	2	2
MOV bit, C	Move Carry to direct bit	2	2
JC rel	Jump if Carry is set	2	2/4
JNC rel	Jump if Carry is not set	2	2/4
JB bit, rel	Jump if direct bit is set	3	3/5
JNB bit, rel	Jump if direct bit is not set	3	3/5
JBC bit, rel	Jump if direct bit is set and clear bit	3	3/5
Program Branching			
ACALL addr11	Absolute subroutine call	2	4
LCALL addr16	Long subroutine call	3	5
RET	Return from subroutine	1	6
RETI	Return from interrupt	1	6
AJMP addr11	Absolute jump	2	4
LJMP addr16	Long jump	3	5
SJMP rel	Short jump (relative address)	2	4
JMP @A+DPTR	Jump indirect relative to DPTR	1	4
JZ rel	Jump if A equals zero	2	2/4
JNZ rel	Jump if A does not equal zero	2	2/4
CJNE A, direct, rel	Compare direct byte to A and jump if not equal	3	3/5
CJNE A, #data, rel	Compare immediate to A and jump if not equal	3	3/5
CJNE Rn, #data, rel	Compare immediate to Register and jump if not equal	3	3/5
CJNE @Ri, #data, rel	Compare immediate to indirect and jump if not equal	3	4/6
DJNZ Rn, rel	Decrement Register and jump if not zero	2	2/4
DJNZ direct, rel	Decrement direct byte and jump if not zero	3	3/5
NOP	No operation	1	1

Notes on Registers, Operands and Addressing Modes:
Rn - Register R0–R7 of the currently selected register bank. **@Ri** - Data RAM location addressed indirectly through R0 or R1. **rel** - 8-bit, signed (two's complement) offset relative to the first byte of the following instruction. Used by SJMP and all conditional jumps. **direct** - 8-bit internal data location's address. This could be a direct-access Data RAM location (0x00–0x7F) or an SFR (0x80–0xFF). **#data** - 8-bit constant **#data16** - 16-bit constant **bit** - Direct-accessed bit in Data RAM or SFR **addr11** - 11-bit destination address used by ACALL and AJMP. The destination must be within the same 2 kB page of program memory as the first byte of the following instruction. **addr16** - 16-bit destination address used by LCALL and LJMP. The destination may be anywhere within the 8 kB program memory space. There is one unused opcode (0xA5) that performs the same function as NOP. All mnemonics copyrighted © Intel Corporation 1980.

8.2. CIP-51 Register Descriptions

Following are descriptions of SFRs related to the operation of the CIP-51 System Controller. Reserved bits should always be written to the value indicated in the SFR description. Future product versions may use these bits to implement new features in which case the reset value of the bit will be the indicated value, selecting the feature's default state. Detailed descriptions of the remaining SFRs are included in the sections of the datasheet associated with their corresponding system function.

SFR Definition 8.1. DPL: Data Pointer Low Byte

Bit	7	6	5	4	3	2	1	0
Name	DPL[7:0]							
Type	R/W							
Reset	0	0	0	0	0	0	0	0

SFR Address = 0x82

Bit	Name	Function
7:0	DPL[7:0]	**Data Pointer Low.** The DPL register is the low byte of the 16-bit DPTR.

SFR Definition 8.2. DPH: Data Pointer High Byte

Bit	7	6	5	4	3	2	1	0
Name	DPH[7:0]							
Type	R/W							
Reset	0	0	0	0	0	0	0	0

SFR Address = 0x83

Bit	Name	Function
7:0	DPH[7:0]	**Data Pointer High.** The DPH register is the high byte of the 16-bit DPTR.

SFR Definition 8.3. SP: Stack Pointer

Bit	7	6	5	4	3	2	1	0
Name	SP[7:0]							
Type	R/W							
Reset	0	0	0	0	0	1	1	1

SFR Address = 0x81

Bit	Name	Function
7:0	SP[7:0]	**Stack Pointer.** The Stack Pointer holds the location of the top of the stack. The stack pointer is incremented before every PUSH operation. The SP register defaults to 0x07 after reset.

SFR Definition 8.4. ACC: Accumulator

Bit	7	6	5	4	3	2	1	0
Name	ACC[7:0]							
Type	R/W							
Reset	0	0	0	0	0	0	0	0

SFR Address = 0xE0; Bit-Addressable

Bit	Name	Function
7:0	ACC[7:0]	**Accumulator.** This register is the accumulator for arithmetic operations.

SFR Definition 8.5. B: B Register

Bit	7	6	5	4	3	2	1	0
Name	B[7:0]							
Type	R/W							
Reset	0	0	0	0	0	0	0	0

SFR Address = 0xF0; Bit-Addressable

Bit	Name	Function
7:0	B[7:0]	**B Register.** This register serves as a second accumulator for certain arithmetic operations.

SFR Definition 8.6. PSW: Program Status Word

Bit	7	6	5	4	3	2	1	0
Name	CY	AC	F0	RS[1:0]		OV	F1	PARITY
Type	R/W	R/W	R/W	R/W		R/W	R/W	R
Reset	0	0	0	0	0	0	0	0

SFR Address = 0xD0; Bit-Addressable

Bit	Name	Function
7	CY	**Carry Flag.** This bit is set when the last arithmetic operation resulted in a carry (addition) or a borrow (subtraction). It is cleared to logic 0 by all other arithmetic operations.
6	AC	**Auxiliary Carry Flag.** This bit is set when the last arithmetic operation resulted in a carry into (addition) or a borrow from (subtraction) the high order nibble. It is cleared to logic 0 by all other arithmetic operations.
5	F0	**User Flag 0.** This is a bit-addressable, general purpose flag for use under software control.
4:3	RS[1:0]	**Register Bank Select.** These bits select which register bank is used during register accesses. 00: Bank 0, Addresses 0x00-0x07 01: Bank 1, Addresses 0x08-0x0F 10: Bank 2, Addresses 0x10-0x17 11: Bank 3, Addresses 0x18-0x1F
2	OV	**Overflow Flag.** This bit is set to 1 under the following circumstances: • An ADD, ADDC, or SUBB instruction causes a sign-change overflow. • A MUL instruction results in an overflow (result is greater than 255). • A DIV instruction causes a divide-by-zero condition. The OV bit is cleared to 0 by the ADD, ADDC, SUBB, MUL, and DIV instructions in all other cases.
1	F1	**User Flag 1.** This is a bit-addressable, general purpose flag for use under software control.
0	PARITY	**Parity Flag.** This bit is set to logic 1 if the sum of the eight bits in the accumulator is odd and cleared if the sum is even.

9. Prefetch Engine

The C8051T622/3 and C8051T326/7 family of devices incorporate a 2-byte prefetch engine. Because the access time of the EPROM memory is 40 ns, and the minimum instruction time is roughly 20 ns, the prefetch engine is necessary for full-speed code execution. Instructions are read from EPROM memory two bytes at a time by the prefetch engine and given to the CIP-51 processor core to execute. When running linear code (code without any jumps or branches), the prefetch engine allows instructions to be executed at full speed. When a code branch occurs, the processor may be stalled for up to two clock cycles while the next set of code bytes is retrieved from EPROM memory.

Note: The prefetch engine should be disabled when the device is in suspend mode to save power.

SFR Definition 9.1. PFE0CN: Prefetch Engine Control

Bit	7	6	5	4	3	2	1	0
Name			PFEN					
Type	R	R	R/W	R	R	R	R	R
Reset	0	0	1	0	0	0	0	0

SFR Address = 0xAF

Bit	Name	Function
7:6	Unused	Unused. Read = 00b, Write = don't care.
5	PFEN	**Prefetch Enable.** This bit enables the prefetch engine. 0: Prefetch engine is disabled. 1: Prefetch engine is enabled.
4:0	Unused	Unused. Read = 00000b. Write = don't care.

10. Memory Organization

The memory organization of the CIP-51 System Controller is similar to that of a standard 8051. There are two separate memory spaces: program memory and data memory. Program and data memory share the same address space but are accessed via different instruction types. The memory organization of the C8051T622/3 and C8051T326/7 device family is shown in Figure 10.1

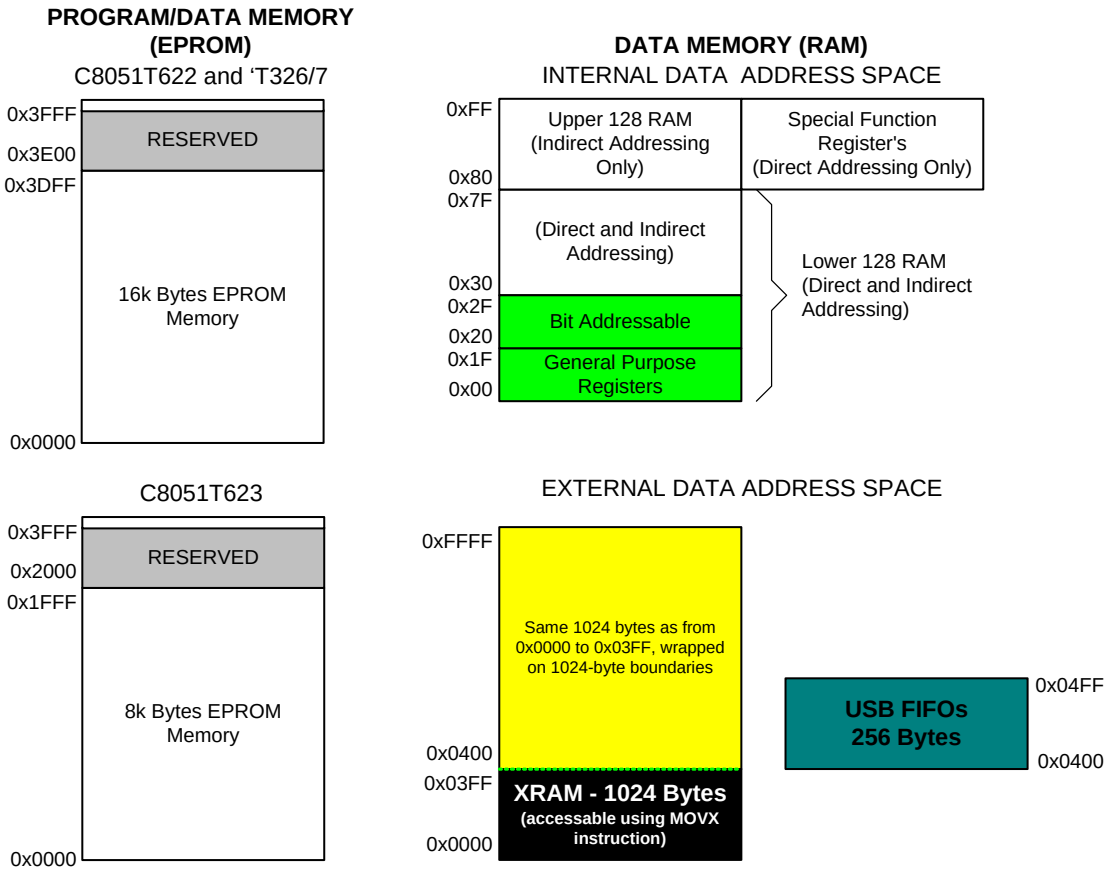

Figure 10.1. Memory Map

10.1. Program Memory

The CIP-51 core has a 64 kB program memory space. The C8051T622/3 and C8051T326/7 implements 16384 or 8192 bytes of this program memory space as in-system byte-programmable EPROM organized in a contiguous block from addresses 0x0000 to 0x3FFF or 0x0000 to 0x1FFF.

Note: 512 bytes (0x3E00 – 0x3FFF) of this memory are reserved for factory use and are not available for user program storage. C2 Register Definition 10.2 shows the program memory maps for C8051T622/3 and C8051T326/7 devices.

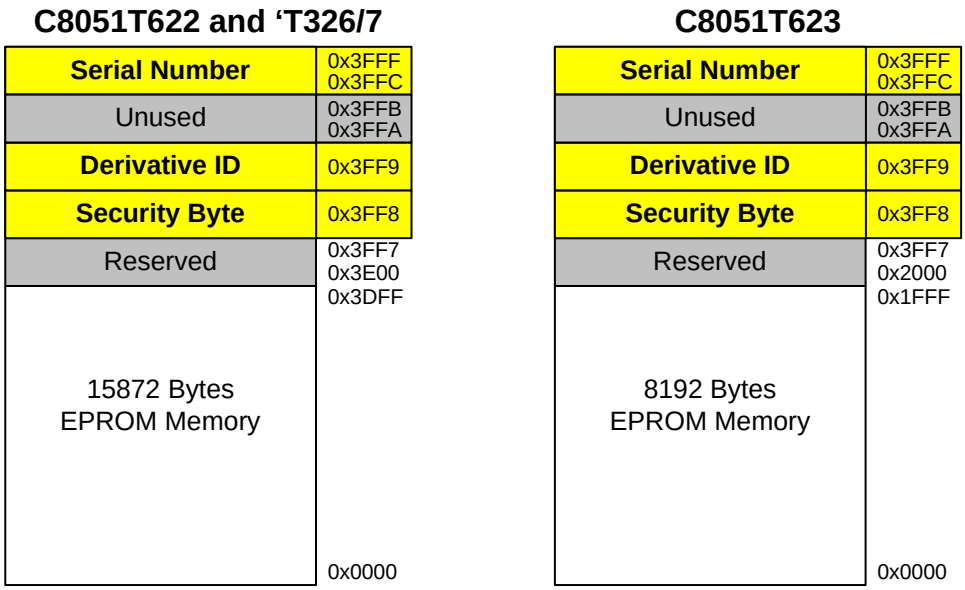

Figure 10.2. Program Memory Map

Program memory is read-only from within firmware. Individual program memory bytes can be read using the MOVC instruction. This facilitates the use of byte-programmable EPROM space for constant storage.

10.1.1. Derivative ID

To distinguish between individual derivatives in the C8051T622/3 and C8051T326/7 device family, the Derivative ID is located at address 0x3FF9 in EPROM memory. The Derivative ID for the devices in the C8051T622/3 and C8051T326/7 are as follows:

Device	Derivative ID
C8051T622	0xBA
C8051T623	0xBB
C8051T326	0xBC
C8051T327	0xBD

10.1.2. Serialization

All C8051T622/3 and C8051T326/7 devices have a factory serialization located in EPROM memory. This value is unique to each device. The serial number is located at addresses 0x3FFC-0x3FFF and can be accessed like any constant array in program memory.

10.2. Data Memory

The C8051T622/3 and C8051T326/7 device family includes 1280 bytes of RAM data memory. 256 bytes of this memory is mapped into the internal RAM space of the 8051. 1024 bytes of this memory is on-chip "external" memory. The data memory map is shown in Figure 10.1 for reference.

10.2.1. Internal RAM

There are 256 bytes of internal RAM mapped into the data memory space from 0x00 through 0xFF. The lower 128 bytes of data memory are used for general purpose registers and scratch pad memory. Either direct or indirect addressing may be used to access the lower 128 bytes of data memory. Locations 0x00 through 0x1F are addressable as four banks of general purpose registers, each bank consisting of eight

byte-wide registers. The next 16 bytes, locations 0x20 through 0x2F, may either be addressed as bytes or as 128 bit locations accessible with the direct addressing mode.

The upper 128 bytes of data memory are accessible only by indirect addressing. This region occupies the same address space as the Special Function Registers (SFR) but is physically separate from the SFR space. The addressing mode used by an instruction when accessing locations above 0x7F determines whether the CPU accesses the upper 128 bytes of data memory space or the SFRs. Instructions that use direct addressing will access the SFR space. Instructions using indirect addressing above 0x7F access the upper 128 bytes of data memory. Figure 10.1 illustrates the data memory organization of the C8051T622/3 and C8051T326/7.

10.2.1.1. General Purpose Registers

The lower 32 bytes of data memory, locations 0x00 through 0x1F, may be addressed as four banks of general-purpose registers. Each bank consists of eight byte-wide registers designated R0 through R7. Only one of these banks may be enabled at a time. Two bits in the program status word, RS0 (PSW.3) and RS1 (PSW.4), select the active register bank (see description of the PSW in SFR Definition 8.6). This allows fast context switching when entering subroutines and interrupt service routines. Indirect addressing modes use registers R0 and R1 as index registers.

10.2.1.2. Bit Addressable Locations

In addition to direct access to data memory organized as bytes, the sixteen data memory locations at 0x20 through 0x2F are also accessible as 128 individually addressable bits. Each bit has a bit address from 0x00 to 0x7F. Bit 0 of the byte at 0x20 has bit address 0x00 while bit7 of the byte at 0x20 has bit address 0x07. Bit 7 of the byte at 0x2F has bit address 0x7F. A bit access is distinguished from a full byte access by the type of instruction used (bit source or destination operands as opposed to a byte source or destination).

The MCS-51™ assembly language allows an alternate notation for bit addressing of the form XX.B where XX is the byte address and B is the bit position within the byte. For example, the instruction:

```
MOV    C, 22.3h
```

moves the Boolean value at 0x13 (bit 3 of the byte at location 0x22) into the Carry flag.

10.2.1.3. Stack

A programmer's stack can be located anywhere in the 256-byte data memory. The stack area is designated using the Stack Pointer (SP) SFR. The SP will point to the last location used. The next value pushed on the stack is placed at SP+1 and then SP is incremented. A reset initializes the stack pointer to location 0x07. Therefore, the first value pushed on the stack is placed at location 0x08, which is also the first register (R0) of register bank 1. Thus, if more than one register bank is to be used, the SP should be initialized to a location in the data memory not being used for data storage. The stack depth can extend up to 256 bytes.

10.2.2. External RAM

There are 1024 bytes of on-chip RAM mapped into the external data memory space. All of these address locations may be accessed using the external move instruction (MOVX) and the data pointer (DPTR), or using MOVX indirect addressing mode. If the MOVX instruction is used with an 8-bit address operand (such as @R1), then the high byte of the 16-bit address is provided by the External Memory Interface Control Register (EMI0CN as shown in SFR Definition 10.1).

For a 16-bit MOVX operation (@DPTR), the upper 6 bits of the 16-bit external data memory address word are "don't cares" (when USBFAE is cleared to 0). As a result, the 1024-byte RAM is mapped modulo style over the entire 64 k external data memory address range. For example, the XRAM byte at address 0x0000 is shadowed at addresses 0x0400, 0x0800, 0x0C00, 0x1000, etc. This is a useful feature when performing

a linear memory fill, as the address pointer doesn't have to be reset when reaching the RAM block boundary.

SFR Definition 10.1. EMI0CN: External Memory Interface Control

Bit	7	6	5	4	3	2	1	0
Name						PGSEL[2:0]		
Type	R	R	R	R	R	R/W	R/W	R/W
Reset	0	0	0	0	0	0	0	0

SFR Address = 0xAA

Bit	Name	Function
7:3	UNUSED	Unused. Read = 00000b; Write = Don't Care
2:0	PGSEL[2:0]	**XRAM Page Select.** The EMI0CN register provides the high byte of the 16-bit external data memory address when using an 8-bit MOVX command, effectively selecting a 256-byte page of RAM. Since the upper (unused) bits of the register are always zero, the PGSEL determines which page of XRAM is accessed. For Example: If EMI0CN = 0x01, addresses 0x0100 through 0x01FF will be accessed.

10.2.3. Accessing USB FIFO Space

The C8051T622/3 and C8051T326/7 include 256 bytes of RAM which functions as USB FIFO space. Figure 10.3 shows an expanded view of the FIFO space and user XRAM. FIFO space is normally accessed via USB FIFO registers; see Section "18.5. FIFO Management" on page 124 for more information on accessing these FIFOs. The MOVX instruction should not be used to load or modify USB data in the FIFO space.

Unused areas of the USB FIFO space may be used as general purpose XRAM if necessary. The FIFO block operates on the USB clock domain; thus the USB clock must be active when accessing FIFO space. Note that the number of SYSCLK cycles required by the MOVX instruction is increased when accessing USB FIFO space.

To access the FIFO RAM directly using MOVX instructions, the following conditions must be met: (1) the USBFAE bit in register EMI0CF must be set to '1', and (2) the USB clock frequency must be greater than or equal to twice the SYSCLK (USBCLK $\geq$ 2 x SYSCLK). When this bit is set, the USB FIFO space is mapped into XRAM space at addresses 0x0400 to 0x04FF. The normal on-chip XRAM at the same addresses cannot be accessed when the USBFAE bit is set to 1.

Important Note: The USB clock must be active when accessing FIFO space.

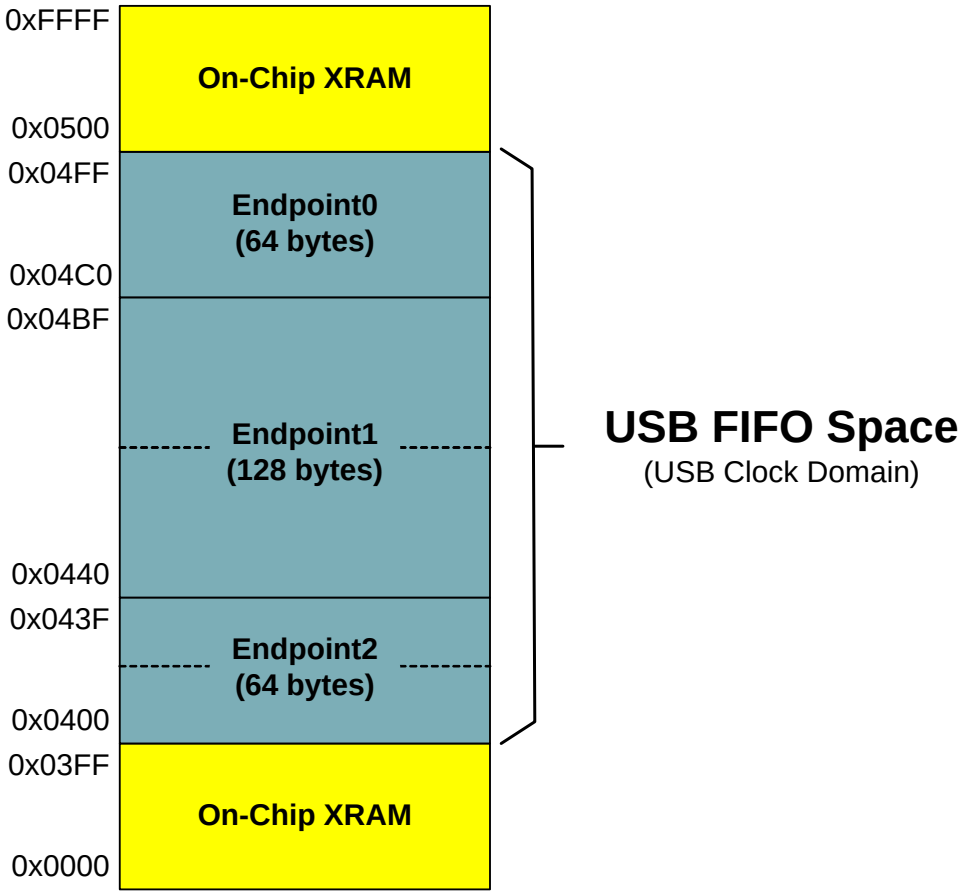

Figure 10.3. USB FIFO Space and XRAM Memory Map with USBFAE set to 1

SFR Definition 10.2. EMI0CF: External Memory Configuration

Bit	7	6	5	4	3	2	1	0
Name		USBFAE						
Type	R	R/W	R	R	R	R	R	R
Reset	0	0	0	0	0	0	1	1

SFR Address = 0x85

Bit	Name	Function
7	Unused	Unused. Read = 0b; Write = Don't Care
6	USBFAE	**USB FIFO Access Enable.** 0: USB FIFO RAM not available through MOVX instructions. 1: USB FIFO RAM available using MOVX instructions. The 256 bytes of USB RAM will be mapped in XRAM space at addresses 0x0400 to 0x04FF. **The USB clock must be active and greater than or equal to twice the SYSCLK (USBCLK > 2 x SYSCLK) to access this area with MOVX instructions.**
5:0	Unused	Unused. Read = 000011b; Write = Don't Care

11. Special Function Registers

The direct-access data memory locations from 0x80 to 0xFF constitute the special function registers (SFRs). The SFRs provide control and data exchange with the C8051T622/3 and C8051T326/7's resources and peripherals. The CIP-51 controller core duplicates the SFRs found in a typical 8051 implementation as well as implementing additional SFRs used to configure and access the sub-systems unique to the C8051T622/3 and C8051T326/7. This allows the addition of new functionality while retaining compatibility with the MCS-51™ instruction set. Table 11.1 lists the SFRs implemented in the C8051T622/3 and C8051T326/7 device family.

The SFR registers are accessed anytime the direct addressing mode is used to access memory locations from 0x80 to 0xFF. SFRs with addresses ending in 0x0 or 0x8 (e.g. P0, TCON, SCON0, IE, etc.) are bit-addressable as well as byte-addressable. All other SFRs are byte-addressable only. Unoccupied addresses in the SFR space are reserved for future use. Accessing these areas will have an indeterminate effect and should be avoided. Refer to the corresponding pages of the data sheet, as indicated in Table 11.2, for a detailed description of each register.

Table 11.1. Special Function Register (SFR) Memory Map

F8	SPI0CN	PCA0L	PCA0H	PCA0CPL0	PCA0CPH0	—	—	VDM0CN
F0	B	P0MDIN	P1MDIN	—	PCA0PWM	IAPCN	EIP1	EIP2
E8	-	PCA0CPL1	PCA0CPH1	PCA0CPL2	PCA0CPH2	—	—	RSTSRC
E0	ACC	XBR0	XBR1	XBR2	IT01CF	SMOD1	EIE1	EIE2
D8	PCA0CN	PCA0MD	PCA0CPM0	PCA0CPM1	PCA0CPM2	—	—	—
D0	PSW	-	SCON1	SBUF1	P0SKIP	P1SKIP	—	USB0XCN
C8	TMR2CN	REG01CN	TMR2RLL	TMR2RLH	TMR2L	TMR2H	—	SMB0ADM
C0	SMB0CN	SMB0CF	SMB0DAT	—	—	—	—	SMB0ADR
B8	IP	CLKMUL	P1MASK	—	—	—	—	—
B0	-	OSCXCN	OSCICN	OSCICL	SBRLL1	SBRLH1	P1MAT	MEMKEY
A8	IE	CLKSEL	EMI0CN	-	SBCON1	-	P0MASK	PFE0CN
A0	P2	SPI0CFG	SPI0CKR	SPI0DAT	P0MDOUT	P1MDOUT	P2MDOUT	—
98	SCON0	SBUF0	—	—	—	—	—	—
90	P1	TMR3CN	TMR3RLL	TMR3RLH	TMR3L	TMR3H	USB0ADR	USB0DAT
88	TCON	TMOD	TL0	TL1	TH0	TH1	CKCON	PSCTL
80	P0	SP	DPL	DPH	P0MAT	EMI0CF	OSCLCN	PCON
	0(8)	1(9)	2(A)	3(B)	4(C)	5(D)	6(E)	7(F)

Note: SFR Addresses ending in 0x0 or 0x8 are bit-addressable locations and can be used with bitwise instructions.

Table 11.2. Special Function Registers

SFRs are listed in alphabetical order. All undefined SFR locations are reserved

Register	Address	Description	Page
ACC	0xE0	Accumulator	47
B	0xF0	B Register	47
CKCON	0x8E	Clock Control	203
CLKMUL	0xB9	Clock Multiplier Control	91
CLKSEL	0xA9	Clock Select	88
DPH	0x83	Data Pointer High	46
DPL	0x82	Data Pointer Low	46
EIE1	0xE6	Extended Interrupt Enable 1	65
EIE2	0xE7	Extended Interrupt Enable 2	67
EIP1	0xF6	Extended Interrupt Priority 1	66
EIP2	0xF7	Extended Interrupt Priority 2	68
EMI0CF	0x85	External Memory Configuration	55
EMI0CN	0xAA	External Memory Interface Control	53
IAPCN	0xF5	In-Application Programming Control	76
IE	0xA8	Interrupt Enable	63
IP	0xB8	Interrupt Priority	64
IT01CF	0xE4	INT0/INT1 Configuration	70
MEMKEY	0xB7	EPROM Memory Lock and Key	75
OSCICL	0xB3	Internal Oscillator Calibration	89
OSCICN	0xB2	Internal Oscillator Control	90
OSCLCN	0x86	Low-Frequency Oscillator Control	92
OSCXCN	0xB1	External Oscillator Control	96
P0	0x80	Port 0 Latch	110
P0MASK	0xAE	Port 0 Mask Configuration	108
P0MAT	0x84	Port 0 Match Configuration	108
P0MDIN	0xF1	Port 0 Input Mode Configuration	111
P0MDOUT	0xA4	Port 0 Output Mode Configuration	111
P0SKIP	0xD4	Port 0 Skip	112
P1	0x90	Port 1 Latch	112
P1MASK	0xBA	Port 1Mask Configuration	109
P1MAT	0xB6	Port 1 Match Configuration	109
P1MDIN	0xF2	Port 1 Input Mode Configuration	113
P1MDOUT	0xA5	Port 1 Output Mode Configuration	113

Table 11.2. Special Function Registers (Continued)

SFRs are listed in alphabetical order. All undefined SFR locations are reserved

Register	Address	Description	Page
P1SKIP	0xD5	Port 1 Skip	114
P2	0xA0	Port 2 Latch	114
P2MDOUT	0xA6	Port 2 Output Mode Configuration	115
PCA0CN	0xD8	PCA Control	238
PCA0CPH0	0xFC	PCA Capture 0 High	243
PCA0CPH1	0xEA	PCA Capture 1 High	243
PCA0CPH2	0xEC	PCA Capture 2 High	243
PCA0CPL0	0xFB	PCA Capture 0 Low	243
PCA0CPL1	0xE9	PCA Capture 1 Low	243
PCA0CPL2	0xEB	PCA Capture 2 Low	243
PCA0CPM0	0xDA	PCA Module 0 Mode Register	241
PCA0CPM1	0xDB	PCA Module 1 Mode Register	241
PCA0CPM2	0xDC	PCA Module 2 Mode Register	241
PCA0H	0xFA	PCA Counter High	242
PCA0L	0xF9	PCA Counter Low	242
PCA0MD	0xD9	PCA Mode	239
PCA0PWM	0xF4	PCA PWM Configuration	240
PCON	0x87	Power Control	79
PFE0CN	0xAF	Prefetch Engine Control	49
PSCTL	0x8F	Program Store R/W Control	75
PSW	0xD0	Program Status Word	48
REG01CN	0xC9	Voltage Regulator Control	39
RSTSRC	0xEF	Reset Source Configuration/Status	85
SBCON1	0xAC	UART1 Baud Rate Generator Control	187
SBRLH1	0xB5	UART1 Baud Rate Generator High Byte	187
SBRLL1	0xB4	UART1 Baud Rate Generator Low Byte	188
SBUF0	0x99	UART0 Data Buffer	177
SBUF1	0xD3	UART1 Data Buffer	186
SCON0	0x98	UART0 Control	176
SCON1	0xD2	UART1 Control	184
SMB0ADM	0xCF	SMBus Slave Address Mask	160
SMB0ADR	0xC7	SMBus Slave Address	159
SMB0CF	0xC1	SMBus Configuration	155
SMB0CN	0xC0	SMBus Control	157

Table 11.2. Special Function Registers (Continued)

SFRs are listed in alphabetical order. All undefined SFR locations are reserved

Register	Address	Description	Page
SMB0DAT	0xC2	SMBus Data	161
SMOD1	0xE5	UART1 Mode	185
SP	0x81	Stack Pointer	47
SPI0CFG	0xA1	SPI Configuration	196
SPI0CKR	0xA2	SPI Clock Rate Control	198
SPI0CN	0xF8	SPI Control	197
SPI0DAT	0xA3	SPI Data	198
TCON	0x88	Timer/Counter Control	208
TH0	0x8C	Timer/Counter 0 High	211
TH1	0x8D	Timer/Counter 1 High	211
TL0	0x8A	Timer/Counter 0 Low	210
TL1	0x8B	Timer/Counter 1 Low	210
TMOD	0x89	Timer/Counter Mode	209
TMR2CN	0xC8	Timer/Counter 2 Control	215
TMR2H	0xCD	Timer/Counter 2 High	217
TMR2L	0xCC	Timer/Counter 2 Low	216
TMR2RLH	0xCB	Timer/Counter 2 Reload High	216
TMR2RLL	0xCA	Timer/Counter 2 Reload Low	216
TMR3CN	0x91	Timer/Counter 3Control	221
TMR3H	0x95	Timer/Counter 3 High	223
TMR3L	0x94	Timer/Counter 3Low	222
TMR3RLH	0x93	Timer/Counter 3 Reload High	222
TMR3RLL	0x92	Timer/Counter 3 Reload Low	222
USB0ADR	0x96	USB0 Indirect Address	120
USB0DAT	0x97	USB0 Data	121
USB0XCN	0xD7	USB0 Transceiver Control	118
VDM0CN	0xFF	V_{DD} Monitor Control	83
XBR0	0xE1	Port I/O Crossbar Control 0	105
XBR1	0xE2	Port I/O Crossbar Control 1	106
XBR2	0xE3	Port I/O Crossbar Control 2	107

12. Interrupts

The C8051T622/3 and C8051T326/7 include an extended interrupt system supporting a total of 14 interrupt sources with two priority levels. The allocation of interrupt sources between on-chip peripherals and external inputs pins varies according to the specific version of the device. Each interrupt source has one or more associated interrupt-pending flag(s) located in an SFR. When a peripheral or external source meets a valid interrupt condition, the associated interrupt-pending flag is set to logic 1.

If interrupts are enabled for the source, an interrupt request is generated when the interrupt-pending flag is set. As soon as execution of the current instruction is complete, the CPU generates an LCALL to a predetermined address to begin execution of an interrupt service routine (ISR). Each ISR must end with an RETI instruction, which returns program execution to the next instruction that would have been executed if the interrupt request had not occurred. If interrupts are not enabled, the interrupt-pending flag is ignored by the hardware and program execution continues as normal. (The interrupt-pending flag is set to logic 1 regardless of the interrupt's enable/disable state).

Each interrupt source can be individually enabled or disabled through the use of an associated interrupt enable bit in an SFR (IE, EIE1, or EIE2). However, interrupts must first be globally enabled by setting the EA bit (IE.7) to logic 1 before the individual interrupt enables are recognized. Setting the EA bit to logic 0 disables all interrupt sources regardless of the individual interrupt-enable settings.

Note: Any instruction that clears a bit to disable an interrupt should be immediately followed by an instruction that has two or more opcode bytes. Using EA (global interrupt enable) as an example:

```
// in 'C':
EA = 0; // clear EA bit.
EA = 0; // this is a dummy instruction with two-byte opcode.

; in assembly:
CLR EA ; clear EA bit.
CLR EA ; this is a dummy instruction with two-byte opcode.
```

For example, if an interrupt is posted during the execution phase of a "CLR EA" opcode (or any instruction which clears a bit to disable an interrupt source), and the instruction is followed by a single-cycle instruction, the interrupt may be taken. However, a read of the enable bit will return a '0' inside the interrupt service routine. When the bit-clearing opcode is followed by a multi-cycle instruction, the interrupt will not be taken.

Some interrupt-pending flags are automatically cleared by the hardware when the CPU vectors to the ISR. However, most are not cleared by the hardware and must be cleared by software before returning from the ISR. If an interrupt-pending flag remains set after the CPU completes the return-from-interrupt (RETI) instruction, a new interrupt request will be generated immediately and the CPU will re-enter the ISR after the completion of the next instruction.

12.1. MCU Interrupt Sources and Vectors

The C8051T622/3 and C8051T326/7 MCUs support 14 interrupt sources. Software can simulate an interrupt by setting any interrupt-pending flag to logic 1. If interrupts are enabled for the flag, an interrupt request will be generated and the CPU will vector to the ISR address associated with the interrupt-pending flag. MCU interrupt sources, associated vector addresses, priority order and control bits are summarized in Table 12.1. Refer to the datasheet section associated with a particular on-chip peripheral for information regarding valid interrupt conditions for the peripheral and the behavior of its interrupt-pending flag(s).

12.1.1. Interrupt Priorities

Each interrupt source can be individually programmed to one of two priority levels: low or high. A low priority interrupt service routine can be preempted by a high priority interrupt. A high priority interrupt cannot be preempted. Each interrupt has an associated interrupt priority bit in an SFR (IP, EIP1, or EIP2) used to configure its priority level. Low priority is the default. If two interrupts are recognized simultaneously, the interrupt with the higher priority is serviced first. If both interrupts have the same priority level, a fixed priority order is used to arbitrate, given in Table 12.1.

12.1.2. Interrupt Latency

Interrupt response time depends on the state of the CPU when the interrupt occurs. Pending interrupts are sampled and priority decoded each system clock cycle. Therefore, the fastest possible response time is 6 system clock cycles: 1 clock cycle to detect the interrupt and 5 clock cycles to complete the LCALL to the ISR. If an interrupt is pending when a RETI is executed, a single instruction is executed before an LCALL is made to service the pending interrupt. Therefore, the maximum response time for an interrupt (when no other interrupt is currently being serviced or the new interrupt is of greater priority) occurs when the CPU is performing an RETI instruction followed by a DIV as the next instruction. In this case, the response time is 20 system clock cycles: 1 clock cycle to detect the interrupt, 6 clock cycles to execute the RETI, 8 clock cycles to complete the DIV instruction and 5 clock cycles to execute the LCALL to the ISR. If the CPU is executing an ISR for an interrupt with equal or higher priority, the new interrupt will not be serviced until the current ISR completes, including the RETI and following instruction.

Note that the CPU is stalled during EPROM write operations and USB FIFO MOVX accesses (see Section “10.2.3. Accessing USB FIFO Space” on page 53). Interrupt service latency will be increased for interrupts occurring while the CPU is stalled. The latency for these situations will be determined by the standard interrupt service procedure (as described above) and the amount of time the CPU is stalled.

12.2. Interrupt Register Descriptions

The SFRs used to enable the interrupt sources and set their priority level are described in this section. Refer to the data sheet section associated with a particular on-chip peripheral for information regarding valid interrupt conditions for the peripheral and the behavior of its interrupt-pending flag(s).

Table 12.1. Interrupt Summary

Interrupt Source	Interrupt Vector	Priority Order	Pending Flag	Bit addressable?	Cleared by HW?	Enable Flag	Priority Control
Reset	0x0000	Top	None	N/A	N/A	Always Enabled	Always Highest
External Interrupt 0 ($\overline{\text{INT0}}$)	0x0003	0	IE0 (TCON.1)	Y	Y	EX0 (IE.0)	PX0 (IP.0)
Timer 0 Overflow	0x000B	1	TF0 (TCON.5)	Y	Y	ET0 (IE.1)	PT0 (IP.1)
External Interrupt 1 ($\overline{\text{INT1}}$)	0x0013	2	IE1 (TCON.3)	Y	Y	EX1 (IE.2)	PX1 (IP.2)
Timer 1 Overflow	0x001B	3	TF1 (TCON.7)	Y	Y	ET1 (IE.3)	PT1 (IP.3)
UART0	0x0023	4	RI0 (SCON0.0) TI0 (SCON0.1)	Y	N	ES0 (IE.4)	PS0 (IP.4)
Timer 2 Overflow	0x002B	5	TF2H (TMR2CN.7) TF2L (TMR2CN.6)	Y	N	ET2 (IE.5)	PT2 (IP.5)
SPI0	0x0033	6	SPIF (SPI0CN.7) WCOL (SPI0CN.6) MODF (SPI0CN.5) RXOVRN (SPI0CN.4)	Y	N	ESPI0 (IE.6)	PSPI0 (IP.6)
SMB0	0x003B	7	SI (SMB0CN.0)	Y	N	ESMB0 (EIE1.0)	PSMB0 (EIP1.0)
USB0	0x0043	8	Special	N	N	EUSB0 (EIE1.0)	PUSB0 (EIP1.1)
RESERVED	0x004B	9	N/A	N/A	N/A	N/A	N/A
RESERVED	0x0053	10	N/A	N/A	N/A	N/A	N/A
Programmable Counter Array	0x005B	11	CF (PCA0CN.7) CCFn (PCA0CN.n) COVF (PCA0PWM.6)	Y	N	EPCA0 (EIE1.4)	PPCA0 (EIP1.4)
RESERVED	0x0063	12	N/A	N/A	N/A	N/A	N/A
RESERVED	0x006B	13	N/A	N/A	N/A	N/A	N/A
Timer 3 Overflow	0x0073	14	TF3H (TMR3CN.7) TF3L (TMR3CN.6)	N	N	ET3 (EIE1.7)	PT3 (EIP1.7)
VBUS Level	0x007B	15	N/A	N/A	N/A	EVBUS (EIE2.0)	PVBUS (EIP2.0)
UART1	0x0083	16	RI1 (SCON1.0) TI1 (SCON1.1)	N	N	ES1 (EIE2.1)	PS1 (EIP2.1)
RESERVED	0x008B	17	N/A	N/A	N/A	N/A	N/A
Port Match	0x0093	18	None	N/A	N/A	EMAT (EIE2.3)	PMAT (EIP2.3)

SFR Definition 12.1. IE: Interrupt Enable

Bit	7	6	5	4	3	2	1	0
Name	EA	ESPI0	ET2	ES0	ET1	EX1	ET0	EX0
Type	R/W	R/W	R/W	R/W	R/W	R/W	R/W	R/W
Reset	0	0	0	0	0	0	0	0

SFR Address = 0xA8; Bit-Addressable

Bit	Name	Function
7	EA	**Enable All Interrupts.** Globally enables/disables all interrupts. It overrides individual interrupt mask settings. 0: Disable all interrupt sources. 1: Enable each interrupt according to its individual mask setting.
6	ESPI0	**Enable Serial Peripheral Interface (SPI0) Interrupt.** This bit sets the masking of the SPI0 interrupts. 0: Disable all SPI0 interrupts. 1: Enable interrupt requests generated by SPI0.
5	ET2	**Enable Timer 2 Interrupt.** This bit sets the masking of the Timer 2 interrupt. 0: Disable Timer 2 interrupt. 1: Enable interrupt requests generated by the TF2L or TF2H flags.
4	ES0	**Enable UART0 Interrupt.** This bit sets the masking of the UART0 interrupt. 0: Disable UART0 interrupt. 1: Enable UART0 interrupt.
3	ET1	**Enable Timer 1 Interrupt.** This bit sets the masking of the Timer 1 interrupt. 0: Disable all Timer 1 interrupt. 1: Enable interrupt requests generated by the TF1 flag.
2	EX1	**Enable External Interrupt 1.** This bit sets the masking of External Interrupt 1. 0: Disable external interrupt 1. 1: Enable interrupt requests generated by the $\overline{\text{INT1}}$ input.
1	ET0	**Enable Timer 0 Interrupt.** This bit sets the masking of the Timer 0 interrupt. 0: Disable all Timer 0 interrupt. 1: Enable interrupt requests generated by the TF0 flag.
0	EX0	**Enable External Interrupt 0.** This bit sets the masking of External Interrupt 0. 0: Disable external interrupt 0. 1: Enable interrupt requests generated by the $\overline{\text{INT0}}$ input.

SFR Definition 12.2. IP: Interrupt Priority

Bit	7	6	5	4	3	2	1	0
Name		PSPI0	PT2	PS0	PT1	PX1	PT0	PX0
Type	R	R/W	R/W	R/W	R/W	R/W	R/W	R/W
Reset	1	0	0	0	0	0	0	0

SFR Address = 0xB8; Bit-Addressable

Bit	Name	Function
7	Unused	Unused. Read = 1b, Write = Don't Care.
6	PSPI0	**Serial Peripheral Interface (SPI0) Interrupt Priority Control.** This bit sets the priority of the SPI0 interrupt. 0: SPI0 interrupt set to low priority level. 1: SPI0 interrupt set to high priority level.
5	PT2	**Timer 2 Interrupt Priority Control.** This bit sets the priority of the Timer 2 interrupt. 0: Timer 2 interrupt set to low priority level. 1: Timer 2 interrupt set to high priority level.
4	PS0	**UART0 Interrupt Priority Control.** This bit sets the priority of the UART0 interrupt. 0: UART0 interrupt set to low priority level. 1: UART0 interrupt set to high priority level.
3	PT1	**Timer 1 Interrupt Priority Control.** This bit sets the priority of the Timer 1 interrupt. 0: Timer 1 interrupt set to low priority level. 1: Timer 1 interrupt set to high priority level.
2	PX1	**External Interrupt 1 Priority Control.** This bit sets the priority of the External Interrupt 1 interrupt. 0: External Interrupt 1 set to low priority level. 1: External Interrupt 1 set to high priority level.
1	PT0	**Timer 0 Interrupt Priority Control.** This bit sets the priority of the Timer 0 interrupt. 0: Timer 0 interrupt set to low priority level. 1: Timer 0 interrupt set to high priority level.
0	PX0	**External Interrupt 0 Priority Control.** This bit sets the priority of the External Interrupt 0 interrupt. 0: External Interrupt 0 set to low priority level. 1: External Interrupt 0 set to high priority level.

SFR Definition 12.3. EIE1: Extended Interrupt Enable 1

Bit	7	6	5	4	3	2	1	0
Name	ET3	Reserved	Reserved	EPCA0	Reserved	Reserved	EUSB0	ESMB0
Type	R/W	R/W	R/W	R/W	R/W	R/W	R/W	R/W
Reset	0	0	0	0	0	0	0	0

SFR Address = 0xE6

Bit	Name	Function
7	ET3	**Enable Timer 3 Interrupt.** This bit sets the masking of the Timer 3 interrupt. 0: Disable Timer 3 interrupts. 1: Enable interrupt requests generated by the TF3L or TF3H flags.
6:5	Reserved	Reserved. Must Write 00b.
4	EPCA0	**Enable Programmable Counter Array (PCA0) Interrupt.** This bit sets the masking of the PCA0 interrupts. 0: Disable all PCA0 interrupts. 1: Enable interrupt requests generated by PCA0.
3:2	Reserved	Reserved. Must Write 00b.
1	EUSB0	**Enable USB (USB0) Interrupt.** This bit sets the masking of the USB0 interrupt. 0: Disable all USB0 interrupts. 1: Enable interrupt requests generated by USB0.
0	ESMB0	**Enable SMBus (SMB0) Interrupt.** This bit sets the masking of the SMB0 interrupt. 0: Disable all SMB0 interrupts. 1: Enable interrupt requests generated by SMB0.

SFR Definition 12.4. EIP1: Extended Interrupt Priority 1

Bit	7	6	5	4	3	2	1	0
Name	PT3	Reserved	Reserved	PPCA0	Reserved	Reserved	PUSB0	PSMB0
Type	R/W	R/W	R/W	R/W	R/W	R/W	R/W	R/W
Reset	0	0	0	0	0	0	0	0

SFR Address = 0xF6

Bit	Name	Function
7	PT3	**Timer 3 Interrupt Priority Control.** This bit sets the priority of the Timer 3 interrupt. 0: Timer 3 interrupts set to low priority level. 1: Timer 3 interrupts set to high priority level.
6:5	Reserved	Reserved. Must Write 00b.
4	PPCA0	**Programmable Counter Array (PCA0) Interrupt Priority Control.** This bit sets the priority of the PCA0 interrupt. 0: PCA0 interrupt set to low priority level. 1: PCA0 interrupt set to high priority level.
3:2	Reserved	Reserved. Must Write 00b.**.**
1	PUSB0	**USB (USB0) Interrupt Priority Control.** This bit sets the priority of the USB0 interrupt. 0: USB0 interrupt set to low priority level. 1: USB0 interrupt set to high priority level.
0	PSMB0	**SMBus (SMB0) Interrupt Priority Control.** This bit sets the priority of the SMB0 interrupt. 0: SMB0 interrupt set to low priority level. 1: SMB0 interrupt set to high priority level.

SFR Definition 12.5. EIE2: Extended Interrupt Enable 2

Bit	7	6	5	4	3	2	1	0
Name					EMAT	Reserved	ES1	EVBUS
Type	R/W	R/W	R/W	R/W	R/W	R/W	R/W	R/W
Reset	0	0	0	0	0	0	0	0

SFR Address = 0xE7

Bit	Name	Function
7-4	Unused	Unused. Read = 0000b, Write = Don't Care.
3	EMAT	**Enable Port Match Interrupts.** This bit sets the masking of the Port Match Event interrupt. 0: Disable all Port Match interrupts. 1: Enable interrupt requests generated by a Port Match.
2	Reserved	Reserved. Must Write 0b.
1	ES1	**Enable UART1 Interrupt.** This bit sets the masking of the UART1 interrupt. 0: Disable UART1 interrupt. 1: Enable UART1 interrupt.
0	EVBUS	**Enable VBUS Level Interrupt.** This bit sets the masking of the VBUS interrupt. 0: Disable all VBUS interrupts. 1: Enable interrupt requests generated by VBUS level sense.

SFR Definition 12.6. EIP2: Extended Interrupt Priority 2

Bit	7	6	5	4	3	2	1	0
Name					PMAT	Reserved	PS1	PVBUS
Type	R	R	R	R	R/W	R/W	R/W	R/W
Reset	0	0	0	0	0	0	0	0

SFR Address = 0xF7

Bit	Name	Function
7:4	Unused	Unused. Read = 0000b, Write = Don't Care.
3	PMAT	**Port Match Interrupt Priority Control.** This bit sets the priority of the Port Match Event interrupt. 0: Port Match interrupt set to low priority level. 1: Port Match interrupt set to high priority level.
2	Reserved	Reserved. Must Write 0b.
1	PS1	**UART1 Interrupt Priority Control.** This bit sets the priority of the UART1 interrupt. 0: UART1 interrupt set to low priority level. 1: UART1 interrupt set to high priority level.
0	PVBUS	**VBUS Level Interrupt Priority Control.** This bit sets the priority of the VBUS interrupt. 0: VBUS interrupt set to low priority level. 1: VBUS interrupt set to high priority level.

12.3. $\overline{\text{INT0}}$ and $\overline{\text{INT1}}$ External Interrupt Sources

The $\overline{\text{INT0}}$ and $\overline{\text{INT1}}$ external interrupt sources are configurable as active high or low, edge or level sensitive. The IN0PL ($\overline{\text{INT0}}$ Polarity) and IN1PL ($\overline{\text{INT1}}$ Polarity) bits in the IT01CF register select active high or active low; the IT0 and IT1 bits in TCON (Section “23.1. Timer 0 and Timer 1” on page 204) select level or edge sensitive. The table below lists the possible configurations.

IT0	IN0PL	$\overline{\text{INT0}}$ Interrupt
1	0	Active low, edge sensitive
1	1	Active high, edge sensitive
0	0	Active low, level sensitive
0	1	Active high, level sensitive

IT1	IN1PL	$\overline{\text{INT1}}$ Interrupt
1	0	Active low, edge sensitive
1	1	Active high, edge sensitive
0	0	Active low, level sensitive
0	1	Active high, level sensitive

$\overline{\text{INT0}}$ and $\overline{\text{INT1}}$ are assigned to Port pins as defined in the IT01CF register (see SFR Definition 12.7). Note that $\overline{\text{INT0}}$ and $\overline{\text{INT0}}$ Port pin assignments are independent of any Crossbar assignments. $\overline{\text{INT0}}$ and $\overline{\text{INT1}}$ will monitor their assigned Port pins without disturbing the peripheral that was assigned the Port pin via the Crossbar. To assign a Port pin only to $\overline{\text{INT0}}$ and/or $\overline{\text{INT1}}$, configure the Crossbar to skip the selected pin(s). This is accomplished by setting the associated bit in register PnSKIP (see Section “17.3. Priority Crossbar Decoder” on page 100 for complete details on configuring the Crossbar).

IE0 (TCON.1) and IE1 (TCON.3) serve as the interrupt-pending flags for the $\overline{\text{INT0}}$ and $\overline{\text{INT1}}$ external interrupts, respectively. If an $\overline{\text{INT0}}$ or $\overline{\text{INT1}}$ external interrupt is configured as edge-sensitive, the corresponding interrupt-pending flag is automatically cleared by the hardware when the CPU vectors to the ISR. When configured as level sensitive, the interrupt-pending flag remains logic 1 while the input is active as defined by the corresponding polarity bit (IN0PL or IN1PL); the flag remains logic 0 while the input is inactive. The external interrupt source must hold the input active until the interrupt request is recognized. It must then deactivate the interrupt request before execution of the ISR completes or another interrupt request will be generated.

SFR Definition 12.7. IT01CF: $\overline{\text{INT0}}$/$\overline{\text{INT1}}$ Configuration

Bit	7	6	5	4	3	2	1	0
Name	IN1PL	IN1SL[2:0]			IN0PL	IN0SL[2:0]		
Type	R/W	R/W			R/W	R/W		
Reset	0	0	0	0	0	0	0	1

SFR Address = 0xE4

Bit	Name	Function
7	IN1PL	**$\overline{\text{INT1}}$ Polarity.** 0: $\overline{\text{INT1}}$ input is active low. 1: $\overline{\text{INT1}}$ input is active high.
6:4	IN1SL[2:0]	**$\overline{\text{INT1}}$ Port Pin Selection Bits.** These bits select which Port pin is assigned to $\overline{\text{INT1}}$. Note that this pin assignment is independent of the Crossbar; $\overline{\text{INT1}}$ will monitor the assigned Port pin without disturbing the peripheral that has been assigned the Port pin via the Crossbar. The Crossbar will not assign the Port pin to a peripheral if it is configured to skip the selected pin. 000: Select P0.0 001: Select P0.1 010: Select P0.2 011: Select P0.3 100: Select P0.4 101: Select P0.5 110: Select P0.6 111: Select P0.7
3	IN0PL	**$\overline{\text{INT0}}$ Polarity.** 0: $\overline{\text{INT0}}$ input is active low. 1: $\overline{\text{INT0}}$ input is active high.
2:0	IN0SL[2:0]	**$\overline{\text{INT0}}$ Port Pin Selection Bits.** These bits select which Port pin is assigned to $\overline{\text{INT0}}$. Note that this pin assignment is independent of the Crossbar; $\overline{\text{INT0}}$ will monitor the assigned Port pin without disturbing the peripheral that has been assigned the Port pin via the Crossbar. The Crossbar will not assign the Port pin to a peripheral if it is configured to skip the selected pin. 000: Select P0.0 001: Select P0.1 010: Select P0.2 011: Select P0.3 100: Select P0.4 101: Select P0.5 110: Select P0.6 111: Select P0.7

13. Program Memory (EPROM)

C8051T622/3 and C8051T326/7 devices include 16 or 8 kB of on-chip byte-programmable EPROM for program code storage. The EPROM memory can be programmed via the C2 debug and programming interface when a special programming voltage is applied to the V_{PP} pin. Additionally, EPROM bytes can be programmed in system using an external capacitor on the V_{PP} pin. Each location in EPROM memory is programmable only once (i.e. non-erasable). Table 6.6 on page 31 shows the EPROM specifications.

13.1. Programming the EPROM Memory

13.1.1. EPROM Programming over the C2 Interface

Programming of the EPROM memory is accomplished through the C2 programming and debug interface. When creating hardware to program the EPROM, it is necessary to follow the programming steps listed below. Please refer to the “C2 Interface Specification” available at http://www.silabs.com for details on communicating via the C2 interface. Section “25. C2 Interface” on page 244 has information about C2 register addresses for the C8051T622/3 and C8051T326/7.

1. **Reset the device using the $\overline{\text{RST}}$ pin**.
2. **Wait at least 20 ms** before sending the first C2 command.
3. Place the device in core reset: **Write 0x04 to the DEVCTL register**.
4. Set the device to program mode (1st step): **Write 0x40 to the EPCTL register**.
5. Set the device to program mode (2nd step): **Write 0x4A to the EPCTL register**.

Note: Devices with a Date Code prior to 1111 should write 0x58 to the EPCTL register.

6. **Apply the V_{PP} programming Voltage**.
7. **Write the first EPROM address for programming to EPADDRH and EPADDRL**.
8. **Write a data byte to EPDAT**. EPADDRH:L will increment by 1 after this write.
9. **Poll the EPBusy bit** using a C2 Address Read command. Note: If EPError is set at this time, the write operation failed.
10. If programming is not finished, return to Step 8 to write the next address in sequence, or return to Step 7 to program a new address.
11. **Remove the V_{PP} programming Voltage**.
12. Remove program mode (1st step): **Write 0x40 to the EPCTL register**.
13. Remove program mode (2nd step): **Write 0x00 to the EPCTL register**.
14. Reset the device: **Write 0x02 and then 0x00 to the DEVCTL register**.

Important Note: There is a finite amount of time which V_{PP} can be applied without damaging the device, which is cumulative over the life of the device. Refer to Table 6.1 on page 28 for the V_{PP} timing specification.

13.1.2. EPROM In-Application Programming

The EPROM of the C8051T622/3 and C8051T326/7 devices has an In-Application Programming option. In-Application Programming will be much slower than normal programming where the V_{PP} programming voltage is applied to the V_{PP} pin, but it allows a small number of bytes to be programmed anywhere in the non-reserved areas of the EPROM. In order to use this option, V_{IO} must be within a specific range and a capacitor must be connected externally to the V_{PP} pin. Refer to Section “6. Electrical Characteristics” on page 28 for the acceptable range of values for V_{IO} and the capacitor on the V_{PP} pin.

Bytes in the EPROM memory must be written one byte at a time. An EPROM write will be performed after each MOVX write instruction. The recommended procedure for writing to the EPROM is as follows:

1. **Disable interrupts**.
2. **Change the core clock to 25 MHz or less.**
3. Enable the VDD Monitor. **Write 0x80 to VDM0CN.**
4. Enable the VDD Monitor as a reset source. **Write 0x02 to RSTSRC.**
5. Disable the Prefetch engine. **Write 0x00 to the PFE0CN register.**
6. **Set the VPP Pin to an open-drain configuration, with a 1 in the port latch.**
7. **Set the PSWE bit (register PSCTL).**
8. **Write the first key code to MEMKEY: 0xA5**.
9. **Write the second key code to MEMKEY: 0xF1**.
10. Enable in-application programming. **Write 0x80 to the IAPCN register.**
11. Using a MOVX write instruction, **write a single data byte to the desired location.**
12. Disable in-application EPROM programming. **Write 0x00 to the IAPCN register.**
13. **Clear the PSWE bit**.
14. Re-enable the Prefetch engine. **Write 0x20 to the PFE0CN register.**
15. **Delay for at least 1 µs.**
16. Disable the programming hardware. **Write 0x40 to the IAPCN register.**
17. **Restore the core clock** (if changed in Step 2)
18. **Re-enable interrupts**.

Steps 8–11 must be repeated for each byte to be written.

When an application uses the In-Application Programming feature, the V_{PP} pin must be set to open-drain mode, with a 1 in the port latch. The pin can still be used a as a general-purpose I/O pin if the programming circuitry of the pin is disabled after all writes are completed by using the IAPHWD bit in the IAPCN register (IAPCN.6). It is not necessary to disable the programming hardware if the In-Application Programming feature has not been used.

Important Note: Software should delay for at least 1 µs after the last EPROM write before setting the IAPHWD bit.

13.2. Security Options

The C8051T622/3 and C8051T326/7 devices provide security options to prevent unauthorized viewing of proprietary program code and constants. A security byte stored at location 0x3FF8 in the EPROM address space can be used to lock the program memory from being read or written across the C2 interface. The lock byte can always be read regardless of the security settings. Table 13.1 shows the security byte decoding. Refer to “Figure 10.2. Program Memory Map” on page 51 for the location of the security byte in EPROM memory.

Important Note: Once the security byte has been written, there are no means of unlocking the device. Locking memory from write access should be performed only after all other code has been successfully programmed to memory.

Table 13.1. Security Byte Decoding

Bits	Description
7–4	**Write Lock:** Clearing any of these bits to logic 0 prevents all code memory from being written across the C2 interface.
3–0	**Read Lock:** Clearing any of these bits to logic 0 prevents all code memory from being read across the C2 interface.

13.3. EPROM Writing Guidelines

Any system which contains routines which write EPROM memory from software involves some risk that the write routines will execute unintentionally if the CPU is operating outside its specified operating range of V_{DD}, system clock frequency, or temperature. This accidental execution of EPROM modifying code can result in alteration of EPROM memory contents causing a system failure.

The following guidelines are recommended for any system which contains routines which write EPROM memory from code.

13.3.1. VDD Maintenance and the VDD monitor

1. If the system power supply is subject to voltage or current "spikes," add sufficient transient protection devices to the power supply to ensure that the supply voltages listed in the Absolute Maximum Ratings table are not exceeded.
2. Make certain that the minimum V_{DD} rise time specification of 1 ms is met. If the system cannot meet this rise time specification, then add an external V_{DD} brownout circuit to the RST pin of the device that holds the device in reset until V_{DD} reaches V_{RST} and re-asserts RST if V_{DD} drops below V_{RST}.
3. Enable the on-chip V_{DD} monitor and enable the V_{DD} monitor as a reset source as early in code as possible. This should be the first set of instructions executed after the Reset Vector. For C-based systems, this will involve modifying the startup code added by the C compiler. See your compiler documentation for more details. Make certain that there are no delays in software between enabling the V_{DD} monitor and enabling the V_{DD} monitor as a reset source.
   Note: Both the VDD Monitor and the VDD Monitor reset source must be enabled to write the EPROM without generating an EPROM Error Device Reset.
4. As an added precaution, explicitly enable the V_{DD} monitor and enable the V_{DD} monitor as a reset source inside the functions that write EPROM memory. The V_{DD} monitor enable instructions should be placed just after the instruction to set PSWE to a 1, but before the EPROM write operation instruction.
5. Make certain that all writes to the RSTSRC (Reset Sources) register use direct assignment operators and explicitly DO NOT use the bit-wise operators (such as AND or OR). For example,"RSTSRC = 0x02" is correct. "RSTSRC |= 0x02" is incorrect.
6. Make certain that all writes to the RSTSRC register explicitly set the PORSF bit to a 1. Areas to check are initialization code which enables other reset sources, such as the Missing Clock Detector, for

example, and instructions which force a Software Reset. A global search on "RSTSRC" can quickly verify this.

13.3.2. PSWE Maintenance

7. Reduce the number of places in code where the PSWE bit (PSCTL.0) is set to a 1. There should be exactly one routine in code that sets PSWE to a 1 to write EPROM bytes.
8. Minimize the number of variable accesses while PSWE is set to a 1. Handle pointer address updates and loop variable maintenance outside the "PSWE = 1;... PSWE = 0;" area.
9. Disable interrupts prior to setting PSWE to a '1' and leave them disabled until after PSWE has been reset to '0'. Any interrupts posted during the EPROM write operation will be serviced in priority order after the EPROM operation has been completed and interrupts have been re-enabled by software.
10. Make certain that the EPROM write pointer variables are not located in XRAM. See your compiler documentation for instructions regarding how to explicitly locate variables in different memory areas.
11. Add address bounds checking to the routines that write EPROM memory to ensure that a routine called with an illegal address does not result in modification of the EPROM.

13.3.3. System Clock

12. If operating from an external crystal, be advised that crystal performance is susceptible to electrical interference and is sensitive to layout and to changes in temperature. If the system is operating in an electrically noisy environment, use the internal oscillator or an external CMOS clock.
13. If operating from the external oscillator, switch to the internal oscillator during EPROM write operations. The external oscillator can continue to run, and the CPU can switch back to the external oscillator after the EPROM operation has completed.

13.4. Program Memory CRC

A CRC engine is included on-chip which provides a means of verifying EPROM contents once the device has been programmed. The CRC engine is available for EPROM verification even if the device is fully read and write locked, allowing for verification of code contents at any time.

The CRC engine is operated through the C2 debug and programming interface, and performs 16-bit CRCs on individual 256-Byte blocks of program memory, or a 32-bit CRC on the entire memory space. To prevent hacking and extrapolation of security-locked source code, the CRC engine will only allow CRCs to be performed on contiguous 256-Byte blocks beginning on 256-Byte boundaries (lowest 8-bits of address are 0x00). For example, the CRC engine can perform a CRC for locations 0x0400 through 0x04FF, but it cannot perform a CRC for locations 0x0401 through 0x0500, or on block sizes smaller or larger than 256 Bytes.

13.4.1. Performing 32-bit CRCs on Full EPROM Content

A 32-bit CRC on the entire EPROM space is initiated by writing to the CRC1 byte over the C2 interface. The CRC calculation begins at address 0x0000, and ends at the end of user EPROM space. The EPBusy bit in register C2ADD will be set during the CRC operation, and cleared once the operation is complete. The 32-bit results will be available in the CRC3-0 registers. CRC3 is the MSB, and CRC0 is the LSB. The polynomial used for the 32-bit CRC calculation is 0x04C11DB7. Note: If a 16-bit CRC has been performed since the last device reset, a device reset should be initiated before performing a 32-bit CRC operation.

13.4.2. Performing 16-bit CRCs on 256-Byte EPROM Blocks

A 16-bit CRC of individual 256-byte blocks of EPROM can be initiated by writing to the CRC0 byte over the C2 interface. The value written to CRC0 is the high byte of the beginning address for the CRC. For example, if CRC0 is written to 0x02, the CRC will be performed on the 256-bytes beginning at address 0x0200, and ending at address 0x2FF. The EPBusy bit in register C2ADD will be set during the CRC operation, and cleared once the operation is complete. The 16-bit results will be available in the CRC1-0 registers. CRC1 is the MSB, and CRC0 is the LSB. The polynomial for the 16-bit CRC calculation is 0x1021.

SFR Definition 13.1. PSCTL: Program Store R/W Control

Bit	7	6	5	4	3	2	1	0
Name								PSWE
Type	R	R	R	R	R	R	R	R/W
Reset	0	0	0	0	0	0	0	0

SFR Address = 0x8F

Bit	Name	Function
7:1	Unused	Unused. Read = 0000000b. Write = don't care.
0	PSWE	**Program Store Write Enable.** Setting this bit allows writing a byte of data to the EPROM program memory using the MOVX write instruction. 0: Writes to EPROM program memory disabled. 1: Writes to EPROM program memory enabled; the MOVX write instruction targets EPROM memory.

SFR Definition 13.2. MEMKEY: EPROM Memory Lock and Key

Bit	7	6	5	4	3	2	1	0
Name	MEMKEY[7:0]							
Type	R/W							
Reset	0	0	0	0	0	0	0	0

SFR Address = 0xB7

Bit	Name	Function
7:0	MEMKEY[7:0]	**EPROM Lock and Key Register.** Write: This register provides a lock and key function for EPROM writes. EPROM writes are enabled by writing 0xA5 followed by 0xF1 to the MEMKEY register. EPROM writes are automatically disabled after the next write is complete. If any writes to MEMKEY are performed incorrectly, or if a EPROM write operation is attempted while these operations are disabled, the EPROM will be permanently locked from writes until the next device reset. If an application never writes to EPROM, it can intentionally lock the EPROM by writing a non-0xA5 value to MEMKEY from software. Read: When read, bits 1–0 indicate the current EPROM lock state. 00: EPROM is write locked. 01: The first key code has been written (0xA5). 10: EPROM is unlocked (writes allowed). 11: EPROM writes disabled until the next reset.

SFR Definition 13.3. IAPCN: In-Application Programming Control

Bit	7	6	5	4	3	2	1	0
Name	IAPEN	IAPDISD						
Type	R/W	R/W	R	R	R	R	R	R
Reset	0	0	0	0	0	0	0	0

SFR Address = 0xF5

Bit	Name	Function
7	IAPEN	**In-Application Programming Enable.** 0: In-Application Programming is disabled. 1: In-Application Programming is enabled.
6	IAPHWD	**In-Application Programming Hardware Disable.** This bit disables the In-Application Programming hardware so the V_{PP} programming pin can be used as a normal GPIO pin. **Note:** This bit should not be set less than 1 µs after the last EPROM write. 0: In-Application Programming discharge hardware enabled. 1: In-Application Programming discharge hardware disabled.
5:0	Unused	Unused. Read = 000000b. Write = don't care.

14. Power Management Modes

The C8051T622/3 and C8051T326/7 devices have three software programmable power management modes: Idle, Stop, and Suspend. Idle mode and stop mode are part of the standard 8051 architecture, while suspend mode is an enhanced power-saving mode implemented by the high-speed oscillator peripheral.

Idle mode halts the CPU while leaving the peripherals and clocks active. In stop mode, the CPU is halted, all interrupts and timers (except the Missing Clock Detector) are inactive, and the internal oscillator is stopped (analog peripherals remain in their selected states; the external oscillator is not affected). Suspend mode is similar to stop mode in that the internal oscillator is halted, but the device can wake on events such as a Port Mismatch, Timer 3 overflow, or activity with the USB transceiver. Additionally, the CPU is not halted in suspend mode, so it can run on another oscillator, if desired. Since clocks are running in Idle mode, power consumption is dependent upon the system clock frequency and the number of peripherals left in active mode before entering Idle. Stop mode and suspend mode consume the least power because the majority of the device is shut down with no clocks active. SFR Definition 14.1 describes the Power Control Register (PCON) used to control the C8051T622/3 and C8051T326/7's Stop and Idle power management modes. Suspend mode is controlled by the SUSPEND bit in the OSCICN register (SFR Definition 16.3).

Although the C8051T622/3 and C8051T326/7 has Idle, Stop, and suspend modes available, more control over the device power can be achieved by enabling/disabling individual peripherals as needed. Each analog peripheral can be disabled when not in use and placed in low power mode. Digital peripherals, such as timers or serial buses, draw little power when they are not in use. Turning off oscillators lowers power consumption considerably, at the expense of reduced functionality.

14.1. Idle Mode

Setting the Idle Mode Select bit (PCON.0) causes the hardware to halt the CPU and enter Idle mode as soon as the instruction that sets the bit completes execution. All internal registers and memory maintain their original data. All analog and digital peripherals can remain active during idle mode.

Idle mode is terminated when an enabled interrupt is asserted or a reset occurs. The assertion of an enabled interrupt will cause the Idle Mode Selection bit (PCON.0) to be cleared and the CPU to resume operation. The pending interrupt will be serviced and the next instruction to be executed after the return from interrupt (RETI) will be the instruction immediately following the one that set the Idle Mode Select bit. If Idle mode is terminated by an internal or external reset, the CIP-51 performs a normal reset sequence and begins program execution at address 0x0000.

Note: If the instruction following the write of the IDLE bit is a single-byte instruction and an interrupt occurs during the execution phase of the instruction that sets the IDLE bit, the CPU may not wake from Idle mode when a future interrupt occurs. Therefore, instructions that set the IDLE bit should be followed by an instruction that has two or more opcode bytes, for example:

```
// in ‘C’:
PCON |= 0x01;                    // set IDLE bit
PCON = PCON;                     // ... followed by a 3-cycle dummy instruction

; in assembly:
ORL PCON, #01h                   ; set IDLE bit
MOV PCON, PCON                   ; ... followed by a 3-cycle dummy instruction
```

If enabled, the Watchdog Timer (WDT) will eventually cause an internal watchdog reset and thereby terminate the Idle mode. This feature protects the system from an unintended permanent shutdown in the event of an inadvertent write to the PCON register. If this behavior is not desired, the WDT may be disabled by software prior to entering the Idle mode if the WDT was initially configured to allow this operation. This pro-

vides the opportunity for additional power savings, allowing the system to remain in the Idle mode indefinitely, waiting for an external stimulus to wake up the system. Refer to Section “15.5. PCA Watchdog Timer Reset” on page 83 for more information on the use and configuration of the WDT.

14.2. Stop Mode

Setting the stop mode Select bit (PCON.1) causes the controller core to enter stop mode as soon as the instruction that sets the bit completes execution. In stop mode the internal oscillator, CPU, and all digital peripherals are stopped; the state of the external oscillator circuit is not affected. Each analog peripheral (including the external oscillator circuit) may be shut down individually prior to entering stop mode. Stop mode can only be terminated by an internal or external reset. On reset, the device performs the normal reset sequence and begins program execution at address 0x0000.

If enabled, the Missing Clock Detector will cause an internal reset and thereby terminate the stop mode. The Missing Clock Detector should be disabled if the CPU is to be put to in STOP mode for longer than the MCD timeout.

By default, when in stop mode the internal regulator is still active. However, the regulator can be configured to shut down while in stop mode to save power. To shut down the regulator in stop mode, the STOPCF bit in register REG01CN should be set to 1 prior to setting the STOP bit (see SFR Definition 7.1). If the regulator is shut down using the STOPCF bit, only the $\overline{\text{RST}}$ pin or a full power cycle are capable of resetting the device.

14.3. Suspend Mode

Setting the SUSPEND bit (OSCICN.5) causes the hardware to halt the high-frequency internal oscillator and go into suspend mode as soon as the instruction that sets the bit completes execution. All internal registers and memory maintain their original data. The CPU is not halted in Suspend, so code can still be executed using an oscillator other than the internal High Frequency Oscillator. Most digital peripherals are not active in suspend mode. The exception to this are the USB0 Transceiver, Port Match feature, and Timer 3, when it is run from an external oscillator source or the internal low-frequency oscillator.

Suspend mode can be terminated by four types of events: a port match (described in Section “17.5. Port Match” on page 107), a Timer 3 overflow (described in Section “23.3. Timer 3” on page 218), resume signalling on the USB data pins, or a device reset event. Note that in order to run Timer 3 in suspend mode, the timer must be configured to clock from either the external clock source or the internal low-frequency oscillator source. When suspend mode is terminated, the device will continue execution on the instruction following the one that set the SUSPEND bit. If the wake event (USB0 resume signalling, port match, or Timer 3 overflow) was configured to generate an interrupt, the interrupt will be serviced upon waking the device. If suspend mode is terminated by an internal or external reset, the CIP-51 performs a normal reset sequence and begins program execution at address 0x0000.

SFR Definition 14.1. PCON: Power Control

Bit	7	6	5	4	3	2	1	0
Name	GF[5:0]						STOP	IDLE
Type	R/W						R/W	R/W
Reset	0	0	0	0	0	0	0	0

SFR Address = 0x87

Bit	Name	Function
7:2	GF[5:0]	**General Purpose Flags 5–0.** These are general purpose flags for use under software control.
1	STOP	**Stop Mode Select.** Setting this bit will place the CIP-51 in stop mode. This bit will always be read as 0. 1: CPU goes into stop mode (internal oscillator stopped).
0	IDLE	**IDLE: Idle Mode Select.** Setting this bit will place the CIP-51 in Idle mode. This bit will always be read as 0. 1: CPU goes into Idle mode. (Shuts off clock to CPU, but clock to Timers, Interrupts, Serial Ports, and Analog Peripherals are still active.)

15. Reset Sources

Reset circuitry allows the controller to be easily placed in a predefined default condition. On entry to this reset state, the following occur:

- CIP-51 halts program execution
- Special Function Registers (SFRs) are initialized to their defined reset values
- External Port pins are forced to a known state
- Interrupts and timers are disabled.

All SFRs are reset to the predefined values noted in the SFR detailed descriptions. The contents of internal data memory are unaffected during a reset; any previously stored data is preserved. However, since the stack pointer SFR is reset, the stack is effectively lost, even though the data on the stack is not altered.

The Port I/O latches are reset to 0xFF (all logic ones) in open-drain mode. Weak pullups are enabled during and after the reset. For V_{DD} Monitor and power-on resets, the $\overline{RST}$ pin is driven low until the device exits the reset state.

On exit from the reset state, the program counter (PC) is reset, and the system clock defaults to the internal oscillator. The Watchdog Timer is enabled with the system clock divided by 12 as its clock source. Program execution begins at location 0x0000.

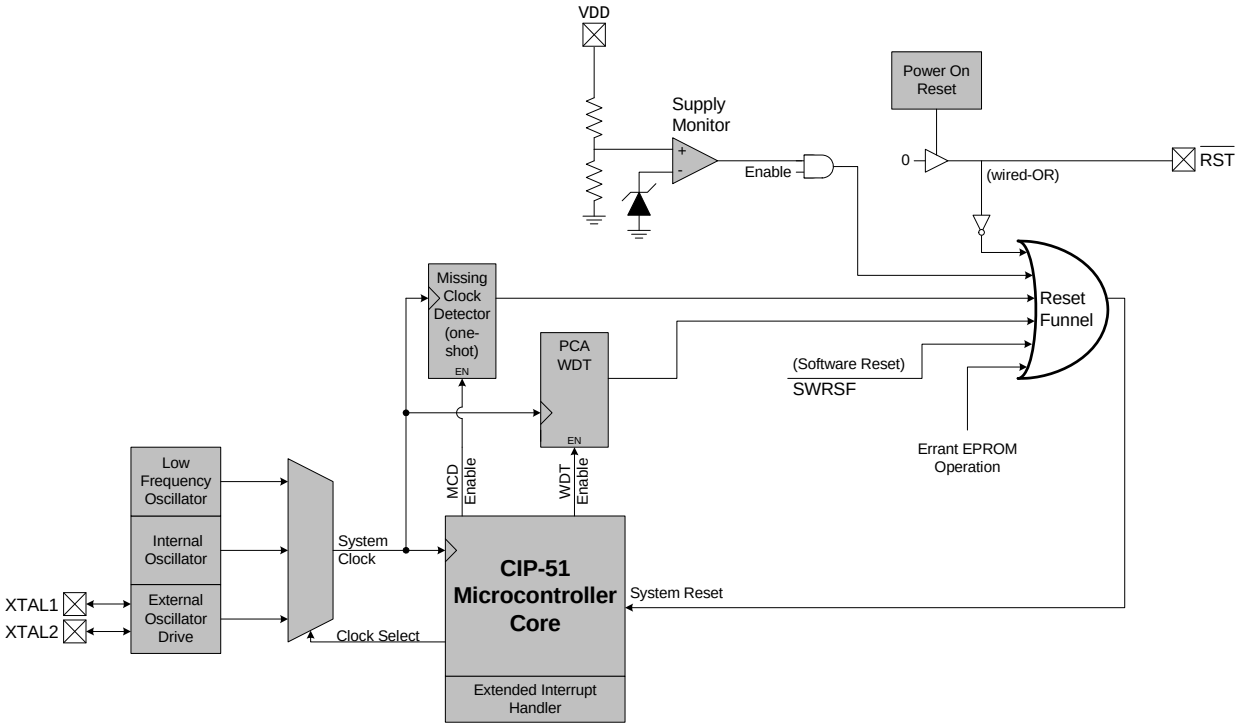

Figure 15.1. Reset Sources

15.1. Power-On Reset

During power-up, the device is held in a reset state and the $\overline{RST}$ pin is driven low until V_{DD} settles above V_{RST}. A delay occurs before the device is released from reset; the delay decreases as the V_{DD} ramp time increases (V_{DD} ramp time is defined as how fast V_{DD} ramps from 0 V to V_{RST}). Figure 15.2. plots the power-on and V_{DD} monitor event timing. The maximum V_{DD} ramp time is 1 ms; slower ramp times may cause the device to be released from reset before V_{DD} reaches the V_{RST} level. For ramp times less than 1 ms, the power-on reset delay ($T_{PORDelay}$) is typically less than 0.3 ms.

On exit from a power-on or V_{DD} monitor reset, the PORSF flag (RSTSRC.1) is set by hardware to logic 1. When PORSF is set, all of the other reset flags in the RSTSRC Register are indeterminate (PORSF is cleared by all other resets). Since all resets cause program execution to begin at the same location (0x0000) software can read the PORSF flag to determine if a power-up was the cause of reset. The content of internal data memory should be assumed to be undefined after a power-on reset. The V_{DD} monitor is enabled following a power-on reset.

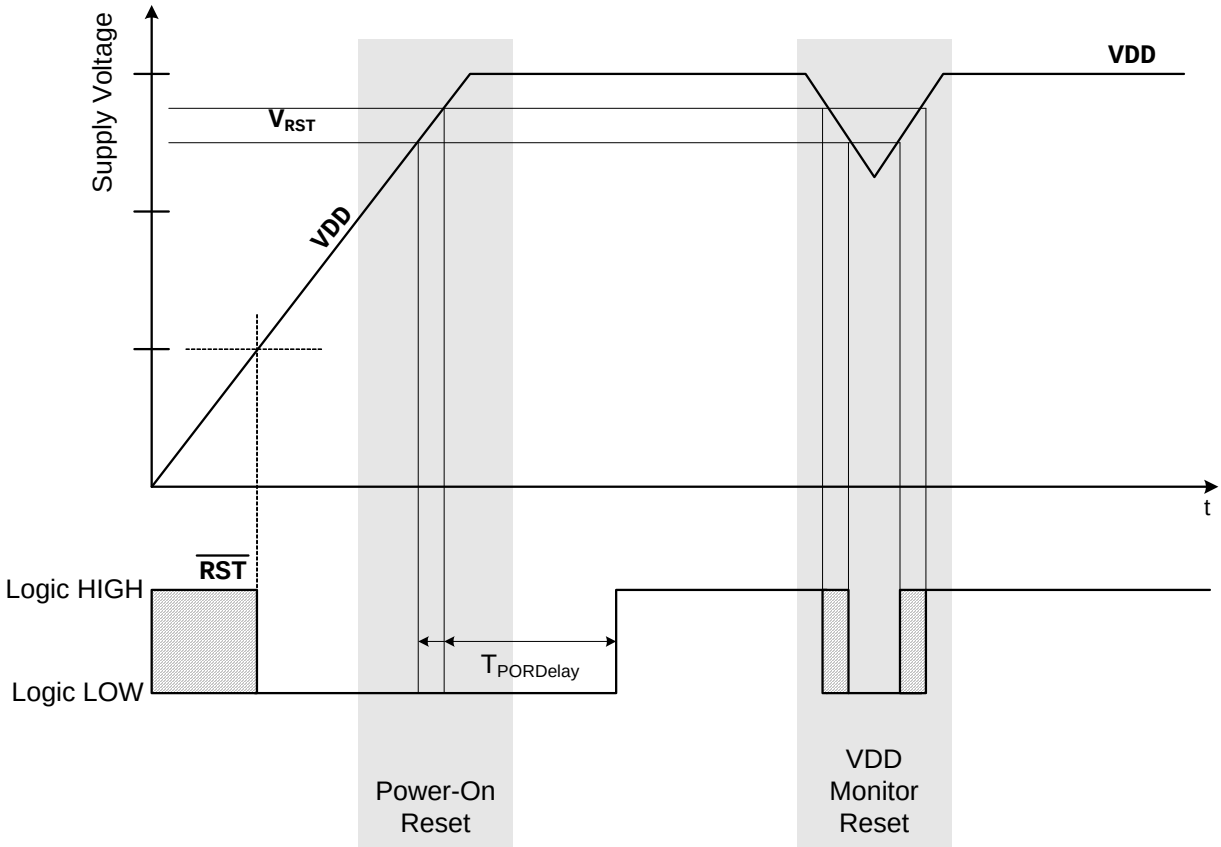

Figure 15.2. Power-On and V_{DD} Monitor Reset Timing

15.2. Power-Fail Reset/V_{DD} Monitor

When a power-down transition or power irregularity causes V_{DD} to drop below V_{RST}, the power supply monitor will drive the $\overline{RST}$ pin low and hold the CIP-51 in a reset state (see Figure 15.2). When V_{DD} returns to a level above V_{RST}, the CIP-51 will be released from the reset state. Note that even though internal data memory contents are not altered by the power-fail reset, it is impossible to determine if V_{DD} dropped below the level required for data retention. If the PORSF flag reads 1, the data may no longer be valid. The V_{DD} monitor is enabled after power-on resets. Its defined state (enabled/disabled) is not altered by any other reset source. For example, if the V_{DD} monitor is disabled by code and a software reset is performed, the V_{DD} monitor will still be disabled after the reset.

I**mportant Note:** If the V_{DD} monitor is being turned on from a disabled state, it should be enabled before it is selected as a reset source. Selecting the V_{DD} monitor as a reset source before it is enabled and stabilized may cause a system reset. In some applications, this reset may be undesirable. If this is not desirable in the application, a delay should be introduced between enabling the monitor and selecting it as a reset source. The procedure for enabling the V_{DD} monitor and configuring it as a reset source from a disabled state is shown below:

1. Enable the V_{DD} monitor (VDMEN bit in VDM0CN = 1).
2. If necessary, wait for the V_{DD} monitor to stabilize (see Table 6.4 for the V_{DD} Monitor turn-on time).
3. Select the V_{DD} monitor as a reset source (PORSF bit in RSTSRC = 1).

See Figure 15.2 for V_{DD} monitor timing; note that the power-on-reset delay is not incurred after a V_{DD} monitor reset. See Table 6.4 for complete electrical characteristics of the V_{DD} monitor.

SFR Definition 15.1. VDM0CN: V_{DD} Monitor Control

Bit	7	6	5	4	3	2	1	0
Name	VDMEN	VDDSTAT						
Type	R/W	R	R	R	R	R	R	R
Reset	Varies	Varies	Varies	Varies	Varies	Varies	Varies	Varies

SFR Address = 0xFF

Bit	Name	Function
7	VDMEN	**V_{DD} Monitor Enable.** This bit turns the V_{DD} monitor circuit on/off. The V_{DD} Monitor cannot generate system resets until it is also selected as a reset source in register RSTSRC (SFR Definition 15.2). Selecting the V_{DD} monitor as a reset source before it has stabilized may generate a system reset. In systems where this reset would be undesirable, a delay should be introduced between enabling the V_{DD} Monitor and selecting it as a reset source. See Table 6.4 for the minimum V_{DD} Monitor turn-on time. 0: V_{DD} Monitor Disabled. 1: V_{DD} Monitor Enabled.
6	VDDSTAT	**V_{DD} Status.** This bit indicates the current power supply status (V_{DD} Monitor output). 0: V_{DD} is at or below the V_{DD} monitor threshold. 1: V_{DD} is above the V_{DD} monitor threshold.
5:0	Unused	Unused. Read = Varies; Write = Don't care.

15.3. External Reset

The external $\overline{RST}$ pin provides a means for external circuitry to force the device into a reset state. Asserting an active-low signal on the $\overline{RST}$ pin generates a reset; an external pullup and/or decoupling of the $\overline{RST}$ pin may be necessary to avoid erroneous noise-induced resets. See Table 6.4 for complete $\overline{RST}$ pin specifications. The PINRSF flag (RSTSRC.0) is set on exit from an external reset.

15.4. Missing Clock Detector Reset

The Missing Clock Detector (MCD) is a one-shot circuit that is triggered by the system clock. If the system clock remains high or low for more than the MCD time-out, a reset will be generated. After a MCD reset, the MCDRSF flag (RSTSRC.2) will read 1, signifying the MCD as the reset source; otherwise, this bit reads 0. Writing a 1 to the MCDRSF bit enables the Missing Clock Detector; writing a 0 disables it. The state of the $\overline{RST}$ pin is unaffected by this reset.

15.5. PCA Watchdog Timer Reset

The programmable Watchdog Timer (WDT) function of the Programmable Counter Array (PCA) can be used to prevent software from running out of control during a system malfunction. The PCA WDT function can be enabled or disabled by software as described in Section "24.4. Watchdog Timer Mode" on page 235; the WDT is enabled and clocked by SYSCLK / 12 following any reset. If a system malfunction prevents user software from updating the WDT, a reset is generated and the WDTRSF bit (RSTSRC.5) is set to 1. The state of the $\overline{RST}$ pin is unaffected by this reset.

15.6. EPROM Error Reset

If an EPROM program read or write targets an illegal address, a system reset is generated. This may occur due to any of the following:

- Programming hardware attempts to write or read an EPROM location which is above the user code space address limit.
- An EPROM read from firmware is attempted above user code space. This occurs when a MOVC operation is attempted above the user code space address limit.
- A Program read is attempted above user code space. This occurs when user code attempts to branch to an address above the user code space address limit.

The MEMERR bit (RSTSRC.6) is set following an EPROM error reset. The state of the $\overline{\text{RST}}$ pin is unaffected by this reset.

15.7. Software Reset

Software may force a reset by writing a 1 to the SWRSF bit (RSTSRC.4). The SWRSF bit will read 1 following a software forced reset. The state of the $\overline{\text{RST}}$ pin is unaffected by this reset.

15.8. USB Reset

Writing 1 to the USBRSF bit in register RSTSRC selects USB0 as a reset source. With USB0 selected as a reset source, a system reset will be generated when either of the following occur:

1. RESET signaling is detected on the USB network. The USB Function Controller (USB0) must be enabled for RESET signaling to be detected. See Section “18. Universal Serial Bus Controller (USB0)” on page 116 for information on the USB Function Controller.
2. A falling or rising voltage on the VBUS pin matches the edge polarity selected by the VBPOL bit in register REG01CN. See Section “7. Voltage Regulators (REG0 and REG1)” on page 35 for details on the VBUS detection circuit.

The USBRSF bit will read 1 following a USB reset. The state of the /RST pin is unaffected by this reset.

SFR Definition 15.2. RSTSRC: Reset Source

Bit	7	6	5	4	3	2	1	0
Name	USBRSF	MEMERR		SWRSF	WDTRSF	MCDRSF	PORSF	PINRSF
Type	R/W	R	R/W	R/W	R	R/W	R/W	R
Reset	Varies	Varies	0	Varies	Varies	Varies	Varies	Varies

SFR Address = 0xEF

Bit	Name	Description	Write	Read
7	USBRSF	**USB Reset Flag**	Writing a 1 enables USB as a reset source.	Set to 1 if USB caused the last reset.
6	MEMERR	**EPROM Error Reset Flag.**	N/A	Set to 1 if EPROM read/write error caused the last reset.
5	UNUSED	Unused. Read = 0b. Write = don't care		
4	SWRSF	**Software Reset Force and Flag.**	Writing a 1 forces a system reset.	Set to 1 if last reset was caused by a write to SWRSF.
3	WDTRSF	**Watchdog Timer Reset Flag.**	N/A	Set to 1 if Watchdog Timer overflow caused the last reset.
2	MCDRSF	**Missing Clock Detector Enable and Flag.**	Writing a 1 enables the Missing Clock Detector. The MCD triggers a reset if a missing clock condition is detected.	Set to 1 if Missing Clock Detector timeout caused the last reset.
1	PORSF	**Power-On / V_{DD} Monitor Reset Flag, and V_{DD} monitor Reset Enable.**	Writing a 1 enables the V_{DD} monitor as a reset source. **Writing 1 to this bit before the V_{DD} monitor is enabled and stabilized may cause a system reset.**	Set to 1 anytime a power-on or V_{DD} monitor reset occurs. **When set to 1 all other RSTSRC flags are indeterminate.**
0	PINRSF	**HW Pin Reset Flag.**	N/A	Set to 1 if $\overline{RST}$ pin caused the last reset.
Note: Do not use read-modify-write operations on this register				

16. Oscillators and Clock Selection

C8051T622/3 and C8051T326/7 devices include a programmable internal high-frequency oscillator, a programmable internal low-frequency oscillator, and an external oscillator drive circuit. The internal high-frequency oscillator can be enabled/disabled and calibrated using the OSCICN and OSCICL registers, as shown in Figure 16.1. The internal low-frequency oscillator can be enabled/disabled and calibrated using the OSCLCN register. The system clock can be sourced by the external oscillator circuit or either internal oscillator. Both internal oscillators offer a selectable post-scaling feature. The USB clock (USBCLK) can be derived from the internal oscillators or external oscillator.

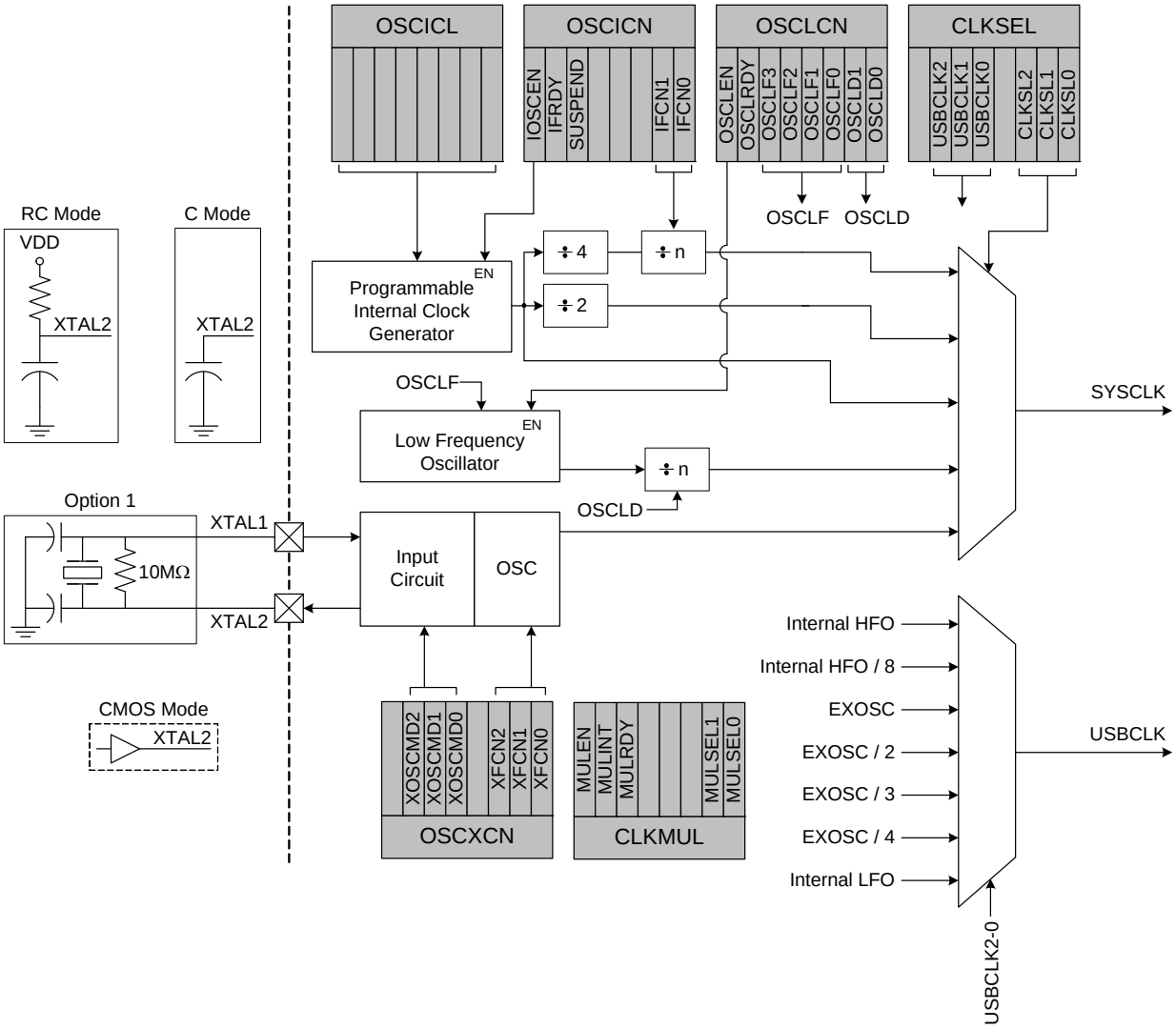

Figure 16.1. Oscillator Options

16.1. System Clock Selection

The CLKSL[2:0] bits in register CLKSEL select which oscillator source is used as the system clock. CLKSL[2:0] must be set to 001b for the system clock to run from the external oscillator; however the external oscillator may still clock certain peripherals (timers, PCA) when the internal oscillator is selected as the system clock. The system clock may be switched on-the-fly between the internal oscillators and external oscillator so long as the selected clock source is enabled and running.

The internal high-frequency and low-frequency oscillators require little start-up time and may be selected as the system clock immediately following the register write which enables the oscillator. The external RC and C modes also typically require no startup time.

16.2. USB Clock Selection

The USBCLK[2:0] bits in register CLKSEL select which oscillator source is used as the USB clock. The USB clock may be derived from the internal oscillators, a divided version of the internal High-Frequency oscillator, or a divided version of the external oscillator. Note that the USB clock must be 48 MHz when operating USB0 as a Full Speed Function; the USB clock must be 6 MHz when operating USB0 as a Low Speed Function. See SFR Definition 16.1 for USB clock selection options.

Some example USB clock configurations for Full and Low Speed mode are given below:

USB Full Speed (48 MHz)		
Internal Oscillator		
Clock Signal	**Input Source Selection**	**Register Bit Settings**
USB Clock	Internal Oscillator*	USBCLK = 000b
Internal Oscillator	Divide by 1	IFCN = 11b
External Oscillator		
Clock Signal	**Input Source Selection**	**Register Bit Settings**
USB Clock	External Oscillator	USBCLK = 010b
External Oscillator	CMOS Oscillator Mode 48 MHz Oscillator	XOSCMD = 010b
Note: Clock Recovery must be enabled for this configuration.		

USB Low Speed (6 MHz)		
Internal Oscillator		
Clock Signal	**Input Source Selection**	**Register Bit Settings**
USB Clock	Internal Oscillator / 8	USBCLK = 001b
Internal Oscillator	Divide by 1	IFCN = 11b
External Oscillator		
Clock Signal	**Input Source Selection**	**Register Bit Settings**
USB Clock	External Oscillator / 4	USBCLK = 101b
External Oscillator	CMOS Oscillator Mode 24 MHz Oscillator	XOSCMD = 010b
	Crystal Oscillator Mode 24 MHz Oscillator	XOSCMD = 110b XFCN = 111b

SFR Definition 16.1. CLKSEL: Clock Select

Bit	7	6	5	4	3	2	1	0
Name		USBCLK[2:0]			OUTCLK	CLKSL[2:0]		
Type	R	R/W			R/W	R/W		
Reset	0	0	0	0	0	0	0	0

SFR Address = 0xA9

Bit	Name	Function
7	Unused	Unused. Read = 0b; Write = Don't Care
6:4	USBCLK[2:0]	**USB Clock Source Select Bits.** 000: USBCLK derived from the Internal High-Frequency Oscillator. 001: USBCLK derived from the Internal High-Frequency Oscillator / 8. 010: USBCLK derived from the External Oscillator. 011: USBCLK derived from the External Oscillator / 2. 100: USBCLK derived from the External Oscillator / 3. 101: USBCLK derived from the External Oscillator / 4. 110: USBCLK derived from the Internal Low-Frequency Oscillator. 111: Reserved.
3	OUTCLK	**Crossbar Clock Out Select.** If the $\overline{\text{SYSCLK}}$ signal is enabled on the Crossbar, this bit selects between outputting SYSCLK and SYSCLK synchronized with the Port I/O pins. 0: Enabling the Crossbar $\overline{\text{SYSCLK}}$ signal outputs SYSCLK. 1: Enabling the Crossbar $\overline{\text{SYSCLK}}$ signal outputs SYSCLK synchronized with the Port I/O.
2:0	CLKSL[2:0]	**System Clock Source Select Bits.** 000: SYSCLK derived from the Internal High-Frequency Oscillator and scaled per the IFCN bits in register OSCICN. 001: SYSCLK derived from the External Oscillator circuit. 010: SYSCLK derived from the Internal High-Frequency Oscillator / 2. 011: SYSCLK derived from the Internal High-Frequency Oscillator. 100: SYSCLK derived from the Internal Low-Frequency Oscillator and scaled per the OSCLD bits in register OSCLCN. 101-111: Reserved.

16.3. Programmable Internal High-Frequency (H-F) Oscillator

All C8051T622/3 and C8051T326/7 devices include a programmable internal high-frequency oscillator that defaults as the system clock after a system reset. The internal oscillator period can be adjusted via the OSCICL register as defined by SFR Definition 16.2.

On C8051T622/3 and C8051T326/7 devices, OSCICL is factory calibrated to obtain a 48 MHz base frequency. Note that the system clock may be derived from the programmed internal oscillator divided by 1, 2, 4, or 8 after a divide by 4 stage, as defined by the IFCN bits in register OSCICN. The divide value defaults to 8 following a reset, which results in a 1.5 MHz system clock.

16.3.1. Internal Oscillator Suspend Mode

When software writes a logic 1 to SUSPEND (OSCICN.5), the internal oscillator is suspended. If the system clock is derived from the internal oscillator, the input clock to the peripheral or CIP-51 will be stopped until one of the following events occur:

- Port 0 Match Event.
- Port 1 Match Event.
- Timer3 Overflow Event.
- USB0 Transceiver Resume Signalling

When one of the oscillator awakening events occur, the internal oscillator, CIP-51, and affected peripherals resume normal operation, regardless of whether the event also causes an interrupt. The CPU resumes execution at the instruction following the write to the SUSPEND bit.

Note: The prefetch engine can be turned off in suspend mode to save power. Additionally, both Voltage Regulators (REG0 and REG1) have low-power modes for additional power savings in suspend mode. See Section “9. Prefetch Engine” on page 49 and Section “7. Voltage Regulators (REG0 and REG1)” on page 35 for more information.

SFR Definition 16.2. OSCICL: Internal H-F Oscillator Calibration

Bit	7	6	5	4	3	2	1	0
Name		OSCICL[6:0]						
Type	R	R/W						
Reset	0	Varies	Varies	Varies	Varies	Varies	Varies	Varies

SFR Address = 0xB3

Bit	Name	Function
7	Unused	Unused. Read = 0; Write = Don’t Care
6:0	OSCICL[6:0]	**Internal Oscillator Calibration Bits.** These bits determine the internal oscillator period. When set to 0000000b, the H-F oscillator operates at its fastest setting. When set to 1111111b, the H-F oscillator operates at its slowest setting. The reset value is factory calibrated to generate an internal oscillator frequency of 48 MHz.

SFR Definition 16.3. OSCICN: Internal H-F Oscillator Control

Bit	7	6	5	4	3	2	1	0
Name	IOSCEN	IFRDY	SUSPEND				IFCN[1:0]	
Type	R/W	R	R/W	R	R	R	R/W	
Reset	1	1	0	0	0	0	0	0

SFR Address = 0xB2

Bit	Name	Function
7	IOSCEN	**Internal H-F Oscillator Enable Bit.** 0: Internal H-F Oscillator Disabled. 1: Internal H-F Oscillator Enabled.
6	IFRDY	**Internal H-F Oscillator Frequency Ready Flag.** 0: Internal H-F Oscillator is not running at programmed frequency. 1: Internal H-F Oscillator is running at programmed frequency.
5	SUSPEND	**Internal Oscillator Suspend Enable Bit.** Setting this bit to logic 1 places the internal oscillator in SUSPEND mode. The internal oscillator resumes operation when one of the SUSPEND mode awakening events occurs.
4:2	Unused	Unused. Read = 000b; Write = Don't Care
1:0	IFCN[1:0]	**Internal H-F Oscillator Frequency Divider Control Bits.** The Internal H-F Oscillator is divided by the IFCN bit setting after a divide-by-4 stage. 00: SYSCLK can be derived from Internal H-F Oscillator divided by 8 (1.5 MHz). 01: SYSCLK can be derived from Internal H-F Oscillator divided by 4 (3 MHz). 10: SYSCLK can be derived from Internal H-F Oscillator divided by 2 (6 MHz). 11: SYSCLK can be derived from Internal H-F Oscillator divided by 1 (12 MHz).

16.4. Clock Multiplier

The C8051T622/3 and C8051T326/7 device includes a 48 MHz high-frequency oscillator instead of a 12 MHz oscillator and a 4x Clock Multiplier, so the USB0 module can be run directly from the internal high-frequency oscillator. For compatibility with the Flash development platform, however, the CLKMUL register (SFR Definition 16.4) behaves as if the Clock Multiplier is present.

SFR Definition 16.4. CLKMUL: Clock Multiplier Control

Bit	7	6	5	4	3	2	1	0
Name	MULEN	MULINIT	MULRDY				MULSEL[1:0]	
Type	R	R	R	R	R	R	R	
Reset	1	1	1	0	0	0	0	0

SFR Address = 0xB9

Bit	Name	Description	Write	Read
7	MULEN	**Clock Multiplier Enable Bit.** 0: Clock Multiplier disabled. 1: Clock Multiplier enabled. This bit always reads 1.		
6	MULINIT	**Clock Multiplier Initialize Bit.**	This bit should be a 0 when the Clock Multiplier is enabled. Once enabled, writing a 1 to this bit will initialize the Clock Multiplier.	The MULRDY bit reads 1 when the Clock Multiplier is stabilized. This bit always reads 1.
5	MULRDY	**Clock Multiplier Ready Bit.** 0: Clock Multiplier not ready. 1: Clock Multiplier ready (locked). This bit always reads 1.		
4:2	Unused	Unused. Read = 000b; Write = Don't Care		
1:0	MULSEL[1:0]	**Clock Multiplier Input Select Bits.** These bits select the clock supplied to the Clock Multiplier. 00: Internal High-Frequency Oscillator 01: External Oscillator 10: External Oscillator/2 11: Reserved. These bits always read 00.		

16.5. Programmable Internal Low-Frequency (L-F) Oscillator

All C8051T622/3 and C8051T326/7 devices include a programmable low-frequency internal oscillator, which is calibrated to a nominal frequency of 80 kHz. The low-frequency oscillator circuit includes a divider that can be changed to divide the clock by 1, 2, 4, or 8, using the OSCLD bits in the OSCLCN register (see SFR Definition 16.5). Additionally, the OSCLF[3:0] bits can be used to adjust the oscillator's output frequency.

16.5.1. Calibrating the Internal L-F Oscillator

Timers 2 and 3 include capture functions that can be used to capture the oscillator frequency, when running from a known time base. When either Timer 2 or Timer 3 is configured for L-F Oscillator Capture Mode, a falling edge (Timer 2) or rising edge (Timer 3) of the low-frequency oscillator's output will cause a capture event on the corresponding timer. As a capture event occurs, the current timer value (TMRnH:TMRnL) is copied into the timer reload registers (TMRnRLH:TMRnRLL). By recording the difference between two successive timer capture values, the low-frequency oscillator's period can be calculated. The OSCLF bits can then be adjusted to produce the desired oscillator frequency.

SFR Definition 16.5. OSCLCN: Internal L-F Oscillator Control

Bit	7	6	5	4	3	2	1	0
Name	OSCLEN	OSCLRDY	OSCLF[3:0]				OSCLD[1:0]	
Type	R/W	R	R.W				R/W	
Reset	0	0	Varies	Varies	Varies	Varies	0	0

SFR Address = 0x86

Bit	Name	Function
7	OSCLEN	**Internal L-F Oscillator Enable.** 0: Internal L-F Oscillator Disabled. 1: Internal L-F Oscillator Enabled.
6	OSCLRDY	**Internal L-F Oscillator Ready.** 0: Internal L-F Oscillator frequency not stabilized. 1: Internal L-F Oscillator frequency stabilized. **Note:** OSCLRDY is only set back to 0 in the event of a device reset or a change to the OSCLD[1:0] bits.
5:2	OSCLF[3:0]	**Internal L-F Oscillator Frequency Control Bits.** Fine-tune control bits for the Internal L-F oscillator frequency. When set to 0000b, the L-F oscillator operates at its fastest setting. When set to 1111b, the L-F oscillator operates at its slowest setting.
1:0	OSCLD[1:0]	**Internal L-F Oscillator Divider Select.** 00: Divide by 8 selected. 01: Divide by 4 selected. 10: Divide by 2 selected. 11: Divide by 1 selected.

16.6. External Oscillator Drive Circuit

The external oscillator circuit may drive an external crystal, ceramic resonator, capacitor, or RC network. A CMOS clock may also provide a clock input. Figure 16.1 shows a block diagram of the four external oscillator options. The external oscillator is enabled and configured using the OSCXCN register (see SFR Definition 16.6).

Important Note on External Oscillator Usage: Port pins must be configured when using the external oscillator circuit. When the external oscillator drive circuit is enabled in crystal/resonator mode, Port pins P0.2 and P0.3 are used as XTAL1 and XTAL2, respectively. When the external oscillator drive circuit is enabled in capacitor, RC, or CMOS clock mode, Port pin P0.3 is used as XTAL2. The Port I/O Crossbar should be configured to skip the Port pin used by the oscillator circuit; see Section “17.3. Priority Crossbar Decoder” on page 100 for Crossbar configuration. Additionally, when using the external oscillator circuit in crystal/resonator, capacitor, or RC mode, the associated Port pins should be configured as **analog inputs**. In CMOS clock mode, the associated pin should be configured as a **digital input**. See Section “17.4. Port I/O Initialization” on page 104 for details on Port input mode selection.

The external oscillator output may be selected as the system clock or used to clock some of the digital peripherals (e.g. Timers, PCA, etc.). See the data sheet chapters for each digital peripheral for details. See Section “6. Electrical Characteristics” on page 28 for complete oscillator specifications.

16.6.1. External Crystal Mode

If a crystal or ceramic resonator is used as the external oscillator, the crystal/resonator and a 10 MΩ resistor must be wired across the XTAL1 and XTAL2 pins as shown in Figure 16.1, “Crystal Mode”. Appropriate loading capacitors should be added to XTAL1 and XTAL2, and both pins should be configured for analog I/O with the digital output drivers disabled.

The capacitors shown in the external crystal configuration provide the load capacitance required by the crystal for correct oscillation. These capacitors are “in series” as seen by the crystal and “in parallel” with the stray capacitance of the XTAL1 and XTAL2 pins.

Note: The recommended load capacitance depends upon the crystal and the manufacturer. Please refer to the crystal data sheet when completing these calculations.

The equation for determining the load capacitance for two capacitors is

$$C_L = \frac{C_A \times C_B}{C_A + C_B} + C_S$$

Where:
C_A and C_B are the capacitors connected to the crystal leads.
C_S is the total stray capacitance of the PCB.
The stray capacitance for a typical layout where the crystal is as close as possible to the pins is 2-5 pF per pin.

If C_A and C_B are the same (C), then the equation becomes

$$C_L = \frac{C}{2} + C_S$$

For example, a tuning-fork crystal of 32 kHz with a recommended load capacitance of 12.5 pF should use the configuration shown in Figure 16.1, Option 1. With a stray capacitance of 3 pF per pin (6 pF total), the 13 pF capacitors yield an equivalent capacitance of 12.5 pF across the crystal, as shown in Figure 16.2.

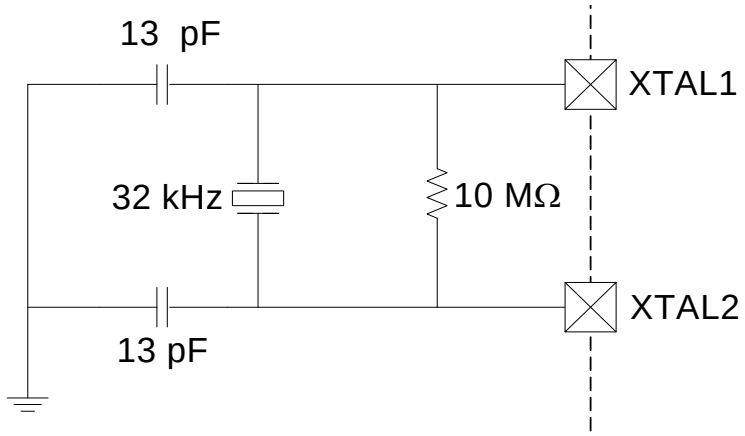

Figure 16.2. External Crystal Example

Important Note on External Crystals: Crystal oscillator circuits are quite sensitive to PCB layout. The crystal should be placed as close as possible to the XTAL pins on the device. The traces should be as short as possible and shielded with ground plane from any other traces which could introduce noise or interference.

When using an external crystal, the external oscillator drive circuit must be configured by software for *Crystal Oscillator Mode* or *Crystal Oscillator Mode with divide by 2 stage*. The divide by 2 stage ensures that the clock derived from the external oscillator has a duty cycle of 50%. The External Oscillator Frequency Control value (XFCN) must also be specified based on the crystal frequency (see SFR Definition 16.6).

When the crystal oscillator is first enabled, the external oscillator valid detector allows software to determine when the external system clock is valid and running. Switching to the external oscillator before the crystal oscillator has stabilized can result in unpredictable behavior. The recommended procedure for starting the crystal is:

1. Configure XTAL1 and XTAL2 for analog I/O.
2. Disable the XTAL1 and XTAL2 digital output drivers by writing 1s to the appropriate bits in the Port Latch register.
3. Configure and enable the external oscillator.
4. Wait at least 1 ms.
5. Poll for XTLVLD => '1'.
6. Switch the system clock to the external oscillator.

16.6.2. External RC Example

If an RC network is used as an external oscillator source for the MCU, the circuit should be configured as shown in Figure 16.1, “RC Mode”. The capacitor should be no greater than 100 pF; however, for very small capacitors, the total capacitance may be dominated by parasitic capacitance in the PCB layout. To determine the required External Oscillator Frequency Control value (XFCN) in the OSCXCN Register, first select the RC network value to produce the desired frequency of oscillation, according to Equation , where f = the frequency of oscillation in MHz, C = the capacitor value in pF, and R = the pull-up resistor value in kΩ.

$$f = 1.23 \times 10^3 / (R \times C)$$

Equation 16.1. RC Mode Oscillator Frequency

For example: If the frequency desired is 100 kHz, let R = 246 kΩ and C = 50 pF:

f = 1.23(10^3) / RC = 1.23 (10^3) / [246 x 50] = 0.1 MHz = 100 kHz

Referring to the table in SFR Definition 16.6, the required XFCN setting is 010b.

16.6.3. External Capacitor Example

If a capacitor is used as an external oscillator for the MCU, the circuit should be configured as shown in Figure 16.1, “C Mode”. The capacitor should be no greater than 100 pF; however, for very small capacitors, the total capacitance may be dominated by parasitic capacitance in the PCB layout. To determine the required External Oscillator Frequency Control value (XFCN) in the OSCXCN Register, select the capacitor to be used and find the frequency of oscillation according to Equation , where f = the frequency of oscillation in MHz, C = the capacitor value in pF, and V_{DD} = the MCU power supply in Volts.

$$f = (KF) / (C \times V_{DD})$$

Equation 16.2. C Mode Oscillator Frequency

For example: Assume V_{DD} = 3.0 V and f = 150 kHz:

f = KF / (C x VDD)
0.150 MHz = KF / (C x 3.0)

Since the frequency of roughly 150 kHz is desired, select the K Factor from the table in SFR Definition 16.6 (OSCXCN) as KF = 22:

0.150 MHz = 22 / (C x 3.0)
C x 3.0 = 22 / 0.150 MHz
C = 146.6 / 3.0 pF = 48.8 pF

Therefore, the XFCN value to use in this example is 011b and C = 50 pF.

SFR Definition 16.6. OSCXCN: External Oscillator Control

Bit	7	6	5	4	3	2	1	0
Name	XCLKVLD	XOSCMD[2:0]			-	XFCN[2:0]		
Type	R	R/W			R	R/W		
Reset	0	0	0	0	0	0	0	0

SFR Address = 0xB1

Bit	Name	Function
7	XCLKVLD	**External Oscillator Valid Flag.** Provides External Oscillator status and is valid at all times for all modes of operation except External CMOS Clock Mode and External CMOS Clock Mode with divide by 2. In these modes, XCLKVLD always returns 0. 0: External Oscillator is unused or not yet stable. 1: External Oscillator is running and stable.
6:4	XOSCMD[2:0]	**External Oscillator Mode Select.** 00x: External Oscillator circuit off. 010: External CMOS Clock Mode. 011: External CMOS Clock Mode with divide by 2 stage. 100: RC Oscillator Mode. 101: Capacitor Oscillator Mode. 110: Crystal Oscillator Mode. 111: Crystal Oscillator Mode with divide by 2 stage.
3	Unused	Read = 0; Write = Don't Care
2:0	XFCN[2:0]	**External Oscillator Frequency Control Bits.** Set according to the desired frequency for RC mode. Set according to the desired K Factor for C mode.

XFCN	Crystal Mode	RC Mode	C Mode
000	$f \le 20$ kHz	$f \le 25$ kHz	K Factor = 0.87
001	20 kHz $< f \le$ 58 kHz	25 kHz $< f \le$ 50 kHz	K Factor = 2.6
010	58 kHz $< f \le$ 155 kHz	50 kHz $< f \le$ 100 kHz	K Factor = 7.7
011	155 kHz $< f \le$ 415 kHz	100 kHz $< f \le$ 200 kHz	K Factor = 22
100	415 kHz $< f \le$ 1.1 MHz	200 kHz $< f \le$ 400 kHz	K Factor = 65
101	1.1 MHz $< f \le$ 3.1 MHz	400 kHz $< f \le$ 800 kHz	K Factor = 180
110	3.1 MHz $< f \le$ 8.2 MHz	800 kHz $< f \le$ 1.6 MHz	K Factor = 664
111	8.2 MHz $< f \le$ 25 MHz	1.6 MHz $< f \le$ 3.2 MHz	K Factor = 1590

17. Port Input/Output

Digital and analog resources are available through 16 or 15 I/O pins, depending on the specific device. Port pins P0.0-P1.6 can be defined as general-purpose I/O (GPIO), assigned to one of the internal digital resources, or assigned to an analog function as shown in Figure 17.3. Port pin P2.0 on can be used as GPIO and is shared with the C2 Interface Data signal (C2D). The designer has complete control over which functions are assigned, limited only by the number of physical I/O pins. This resource assignment flexibility is achieved through the use of a Priority Crossbar Decoder. Note that the state of a Port I/O pin can always be read in the corresponding Port latch, regardless of the Crossbar settings.

The Crossbar assigns the selected internal digital resources to the I/O pins based on the Priority Decoder (Figure 17.4). The registers XBR0, XBR1, and XBR2, defined in SFR Definition 17.1, SFR Definition 17.2, and SFR Definition 17.2, are used to select internal digital functions.

All Port I/Os are 5 V tolerant (refer to Figure 17.2 for the Port cell circuit). The Port I/O cells are configured as either push-pull or open-drain in the Port Output Mode registers (PnMDOUT, where n = 0,1). Complete Electrical Specifications for Port I/O are given in Table 6.3 on page 30

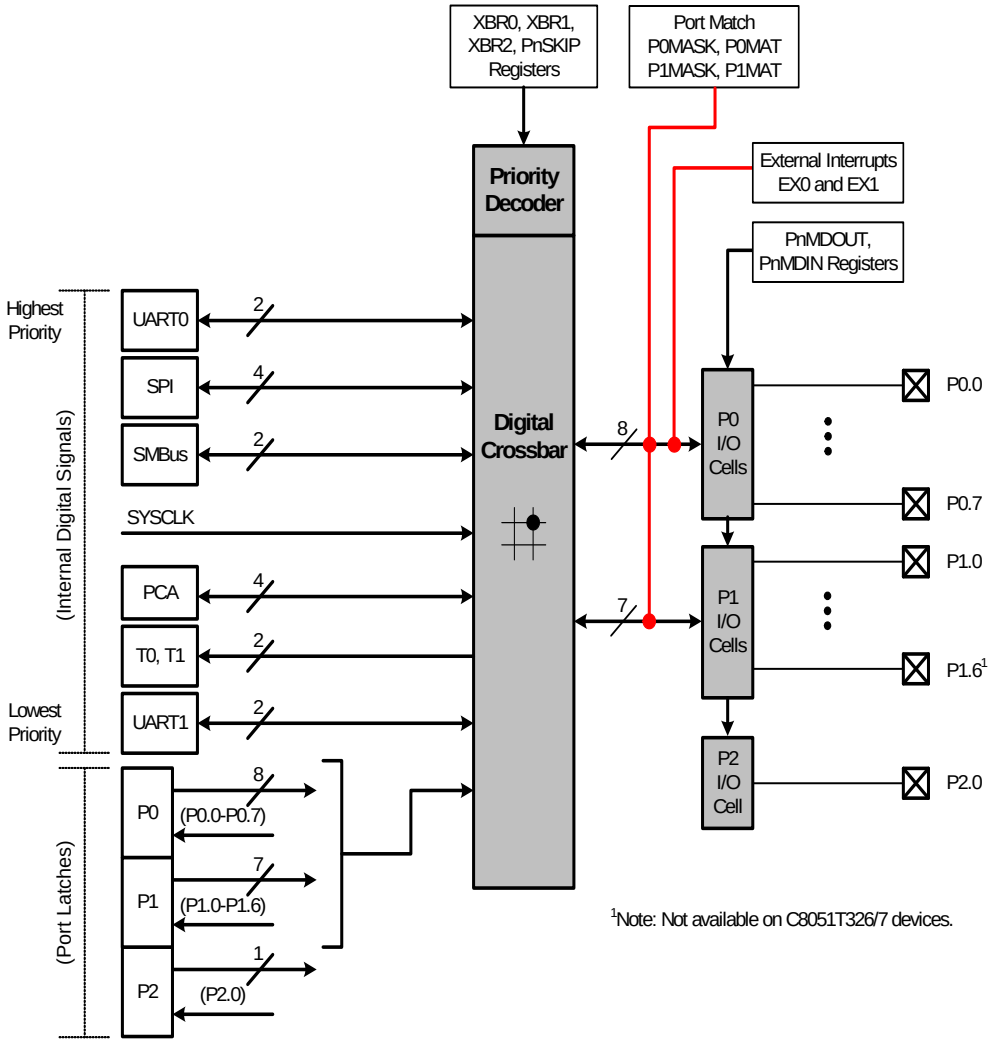

Figure 17.1. Port I/O Functional Block Diagram

17.1. Port I/O Modes of Operation

Port pins use the Port I/O cell shown in Figure 17.2. Each Port I/O cell can be configured by software for analog I/O or digital I/O using the PnMDIN registers. On reset, all Port I/O cells default to a high impedance state with weak pull-ups enabled until the Crossbar is enabled (XBARE = 1).

17.1.1. Port Pins Configured for Analog I/O

Any pins to be used as an external oscillator input/output should be configured for analog I/O (PnMDIN.n = 1). When a pin is configured for analog I/O, its weak pullup, digital driver, and digital receiver are disabled. Port pins configured for analog I/O will always read back a value of 0.

Configuring pins as analog I/O saves power and isolates the Port pin from digital interference. Port pins configured as digital inputs may still be used by analog peripherals; however, this practice is not recommended and may result in measurement errors.

17.1.2. Port Pins Configured For Digital I/O

Any pins to be used by digital peripherals (UART, SPI, SMBus, etc.), external digital event capture functions, or as GPIO should be configured as digital I/O (PnMDIN.n = 1). For digital I/O pins, one of two output modes (push-pull or open-drain) must be selected using the PnMDOUT registers.

Push-pull outputs (PnMDOUT.n = 1) drive the Port pad to the V_{IO} or GND supply rails based on the output logic value of the Port pin. Open-drain outputs have the high side driver disabled; therefore, they only drive the Port pad to GND when the output logic value is 0 and become high impedance inputs (both high and low drivers turned off) when the output logic value is 1.

When a digital I/O cell is placed in the high impedance state, a weak pull-up transistor pulls the Port pad to the V_{DD} supply voltage to ensure the digital input is at a defined logic state. Weak pull-ups are disabled when the I/O cell is driven to GND to minimize power consumption and may be globally disabled by setting WEAKPUD to 1. The user should ensure that digital I/O are always internally or externally pulled or driven to a valid logic state to minimize power consumption. Port pins configured for digital I/O always read back the logic state of the Port pad, regardless of the output logic value of the Port pin.

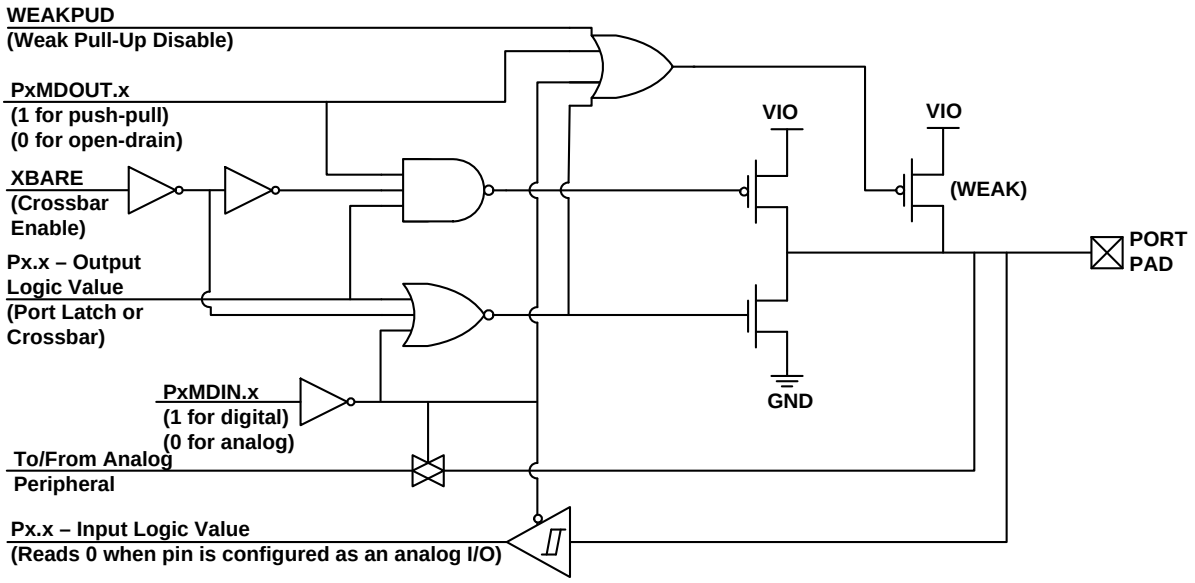

Figure 17.2. Port I/O Cell Block Diagram

17.1.3. Interfacing Port I/O to 5 V Logic

All Port I/O configured for digital, open-drain operation are capable of interfacing to digital logic operating at a supply voltage higher than V_{IO} and less than 5.25 V. An external pull-up resistor to the higher supply voltage is typically required for most systems.

Important Note: In a multi-voltage interface, the external pull-up resistor should be sized to allow a current of at least 150 µA to flow into the Port pin when the supply voltage is between (V_{IO} + 0.6 V) and (V_{IO} + 1.0 V). Once the Port pin voltage increases beyond this range, the current flowing into the Port pin is minimal.

17.2. Assigning Port I/O Pins to Analog and Digital Functions

Port I/O pins can be assigned to various analog, digital, and external interrupt functions. The Port pins assigned to analog functions should be configured for analog I/O, and Port pins assigned to digital or external interrupt functions should be configured for digital I/O.

17.2.1. Assigning Port I/O Pins to Analog Functions

Table 17.1 shows all available analog functions that require Port I/O assignments. **Port pins selected for these analog functions should have their corresponding bit in PnSKIP set to 1.** This reserves the pin for use by the analog function and does not allow it to be claimed by the Crossbar. Table 17.1 shows the potential mapping of Port I/O to each analog function.

Table 17.1. Port I/O Assignment for Analog Functions

Analog Function	Potentially Assignable Port Pins	Suffers) used for Assignment
External Oscillator in Crystal Mode (XTAL1, XTAL2)	P0.2, P0.3	OSCXCN, PnSKIP
External Oscillator in RC or C Mode (XTAL2)	P0.3	OSCXCN, PnSKIP

17.2.2. Assigning Port I/O Pins to Digital Functions

Any Port pins not assigned to analog functions may be assigned to digital functions or used as GPIO. Most digital functions rely on the Crossbar for pin assignment; however, some digital functions bypass the Crossbar in a manner similar to the analog functions listed above. **Port pins used by these digital functions and any Port pins selected for use as GPIO should have their corresponding bit in PnSKIP set to 1.** Table 17.2 shows all available digital functions and the potential mapping of Port I/O to each digital function.

Table 17.2. Port I/O Assignment for Digital Functions

Digital Function	Potentially Assignable Port Pins	Suffers) used for Assignment
UART0, SPI0, SMBus, SYSCLK, PCA0 (CEX0-2 and ECI), T0, T1, or UART1.	Any Port pin available for assignment by the Crossbar. This includes P0.0 - P1.6 pins which have their PnSKIP bit set to 0. **Note:** The Crossbar will always assign UART0 pins to P0.4 and P0.5.	XBR0, XBR1, XBR2
Any pin used for GPIO	P0.0 - P2.0 **Note:** Port pin P1.6 is only available on C8051T622/3. devices.	PnSKIP

17.2.3. Assigning Port I/O Pins to External Digital Event Capture Functions

External digital event capture functions can be used to trigger an interrupt or wake the device from a low power mode when a transition occurs on a digital I/O pin. The digital event capture functions do not require dedicated pins and will function on both GPIO pins (PnSKIP = 1) and pins in use by the Crossbar (PnSKIP = 0). External digital event capture functions cannot be used on pins configured for analog I/O. Table 17.3 shows all available external digital event capture functions.

Table 17.3. Port I/O Assignment for External Digital Event Capture Functions

Digital Function	Potentially Assignable Port Pins	SFR(s) used for Assignment
External Interrupt 0	P0.0–P0.7	IT01CF
External Interrupt 1	P0.0–P0.7	IT01CF
Port Match	P0.0–P1.6	P0MASK, P0MAT P1MASK, P1MAT
Note: Port pin P1.6 is available only on C8051T622/3 devices.		

17.3. Priority Crossbar Decoder

The Priority Crossbar Decoder assigns a priority to each I/O function, starting at the top with UART0. When a digital resource is selected, the least-significant unassigned Port pin is assigned to that resource (excluding UART0, which is always at pins 4 and 5). If a Port pin is assigned, the Crossbar skips that pin when assigning the next selected resource. Additionally, the Crossbar will skip Port pins whose associated bits in the PnSKIP registers are set. The PnSKIP registers allow software to skip Port pins that are to be used for analog input, dedicated functions, or GPIO.

Because of the nature of the Priority Crossbar Decoder, not all peripherals can be located on all port pins. Figure 17.3 shows the possible pins on which peripheral I/O can appear.

Important Note on Crossbar Configuration: If a Port pin is claimed by a peripheral without use of the Crossbar, its corresponding PnSKIP bit should be set. The Crossbar skips selected pins as if they were already assigned, and moves to the next unassigned pin.

Registers XBR0, XBR1, and XBR2 are used to assign the digital I/O resources to the physical I/O Port pins. Note that when the SMBus is selected, the Crossbar assigns both pins associated with the SMBus (SDA and SCL); when a UART is selected, the Crossbar assigns both pins associated with the UART (TX and RX). UART0 pin assignments are fixed for bootloading purposes: UART TX0 is always assigned to P0.4; UART RX0 is always assigned to P0.5. Standard Port I/Os appear contiguously after the prioritized functions have been assigned. Figure 17.4 and Figure 17.5 show examples of how the crossbar assigns peripherals according to the XBRn and PnSKIP register settings.

Important Note: The SPI can be operated in either 3-wire or 4-wire modes, pending the state of the NSSMD1–NSSMD0 bits in register SPI0CN. According to the SPI mode, the NSS signal may or may not be routed to a Port pin.

Port	P0								P1							P2
Pin Number	0	1	2	3	4	5	6	7	0	1	2	3	4	5	6[1]	Signal Unavailable to Crossbar
Special Function Signals			XTAL1	XTAL2						VPP						
TX0					■											
RX0						■										
SCK	■	■	■	■	■	■	■	■	■	■	■	■	■	■	■	
MISO		■	■	■	■	■	■	■	■	■	■	■	■	■	■	
MOSI			■	■	■	■	■	■	■	■	■	■	■	■	■	
NSS[2]				■	■	■	■	■	■	■	■	■	■	■	■	
SDA	■	■	■	■	■	■	■	■	■	■	■	■	■	■	■	
SCL		■	■	■	■	■	■	■	■	■	■	■	■	■	■	
SYSCLK	■	■	■	■	■	■	■	■	■	■	■	■	■	■	■	
CEX0	■	■	■	■	■	■	■	■	■	■	■	■	■	■	■	
CEX1		■	■	■	■	■	■	■	■	■	■	■	■	■	■	
CEX2			■	■	■	■	■	■	■	■	■	■	■	■	■	
ECI	■	■	■	■	■	■	■	■	■	■	■	■	■	■	■	
T0	■	■	■	■	■	■	■	■	■	■	■	■	■	■	■	
T1	■	■	■	■	■	■	■	■	■	■	■	■	■	■	■	
TX1	■	■	■	■	■	■	■	■	■	■	■	■	■	■	■	
RX1		■	■	■	■	■	■	■	■	■	■	■	■	■	■	
Pin Skip Settings	0	0	0	0	0	0	0	0	0	0	0	0	0	0	0	
	P0SKIP								P1SKIP							

Pins P0.0-P1.6[1] are capable of being assigned to crossbar peripherals.

The crossbar peripherals are assigned in priority order from top to bottom, according to this diagram.

■ These boxes represent Port pins which can potentially be assigned to a peripheral.

□ Special Function Signals are not assigned by the crossbar. When these signals are enabled, the Crossbar should be manually configured to skip the corresponding port pins.

□ Pins can be “skipped” by setting the corresponding bit in PnSKIP to ‘1’.

Notes:
1. P1.6 is not available on all devices.
2. NSS is only pinned out when the SPI is in 4-wire mode.

Figure 17.3. Priority Crossbar Decoder Potential Pin Assignments

Port	P0								P1							P2
Pin Number	0	1	2	3	4	5	6	7	0	1	2	3	4	5	6[1]	Signal Unavailable to Crossbar
Special Function Signals			XTAL1	XTAL2						VPP						
TX0					■											
RX0						■										
SCK	■															
MISO		■														
MOSI			■													
NSS				■												
SDA																
SCL																
SYSCLK																
CEX0							■									
CEX1								■								
CEX2									■							
ECI																
T0																
T1																
TX1																
RX1																
Pin Skip Settings	0	0	0	0	0	0	0	0	0	0	0	0	0	0	0	
	P0SKIP								P1SKIP							

In this example, the crossbar is configured to assign the UART TX0 and RX0 signals, the SPI signals, and the PCA signals. Note that the SPI signals are assigned as multiple signals, and there are no pins skipped using the P0SKIP or P1SKIP registers.

■ These boxes represent the port pins which are used by the peripherals in this configuration.

1st TX0 is assigned to P0.4
2nd RX0 is assigned to P0.5
3rd SCK, MISO, MOSI, and NSS are assigned to P0.0, P0.1, P0.2, and P0.3, respectively.
4th CEX0, CEX1, and CEX2 are assigned to P0.6, P0.7, and P1.0, respectively.

All unassigned pins can be used as GPIO or for other non-crossbar functions.

Notes:
1. P1.6 is not available on all devices.

Figure 17.4. Priority Crossbar Decoder Example 1—No Skipped Pins

Port	P0								P1							P2
Pin Number	0	1	2	3	4	5	6	7	0	1	2	3	4	5	6[1]	Signal Unavailable to Crossbar
Special Function Signals			XTAL1	XTAL2						VPP						
TX0	P0.0 Skipped		P0.2 Skipped	P0.3 Skipped	■											
RX0						■										
SCK		■														
MISO							■									
MOSI								■								
NSS									■							
SDA																
SCL																
SYSCLK																
CEX0										■						
CEX1											■					
CEX2												■				
ECI																
T0																
T1																
TX1																
RX1																
Pin Skip Settings	1	0	1	1	0	0	0	0	0	0	0	0	0	0	0	
	P0SKIP								P1SKIP							

In this example, the crossbar is configured to assign the UART TX0 and RX0 signals, the SPI signals, and the PCA signals. Note that the SPI signals are assigned as multiple signals. Additionally, pins P0.0, P0.2, and P0.3 are configured to be skipped using the P0SKIP register.

■ These boxes represent the port pins which are used by the peripherals in this configuration.

1st TX0 is assigned to P0.4
2nd RX0 is assigned to P0.5
3rd SCK, MISO, MOSI, and NSS are assigned to P0.1, P0.6, P0.7, and P1.0, respectively.
4th CEX0, CEX1, and CEX2 are assigned to P1.1, P1.2, and P1.3, respectively.

All unassigned pins, including those skipped by XBR0 can be used as GPIO or for other non-crossbar functions.

Notes:
1. P1.6 is not available on all devices.

Figure 17.5. Priority Crossbar Decoder Example 2—Skipping Pins

17.4. Port I/O Initialization

Port I/O initialization consists of the following steps:

1. Select the input mode (analog or digital) for all Port pins, using the Port Input Mode register (PnMDIN).
2. Select the output mode (open-drain or push-pull) for all Port pins, using the Port Output Mode register (PnMDOUT).
3. Select any pins to be skipped by the I/O Crossbar using the Port Skip registers (PnSKIP).
4. Assign Port pins to desired peripherals (XBR0, XBR1, XBR2).
5. Enable the Crossbar (XBARE = 1).

All Port pins must be configured as either analog or digital inputs. When a pin is configured as an analog input, its weak pullup, digital driver, and digital receiver are disabled. This process saves power and reduces noise on the analog input. Pins configured as digital inputs may still be used by analog peripherals; however this practice is not recommended.

Additionally, all analog input pins should be configured to be skipped by the Crossbar (accomplished by setting the associated bits in PnSKIP). Port input mode is set in the PnMDIN register, where a 1 indicates a digital input, and a 0 indicates an analog input. All pins default to digital inputs on reset. See SFR Definition 17.9 and SFR Definition 17.13 for the PnMDIN register details.

The output driver characteristics of the I/O pins are defined using the Port Output Mode registers (PnMDOUT). Each Port Output driver can be configured as either open drain or push-pull. This selection is required even for the digital resources selected in the XBRn registers, and is not automatic. The only exception to this is the SMBus (SDA, SCL) pins, which are configured as open-drain regardless of the PnMDOUT settings. When the WEAKPUD bit in XBR1 is 0, a weak pullup is enabled for all Port I/O configured as open-drain. WEAKPUD does not affect the push-pull Port I/O. Furthermore, the weak pullup is turned off on an output that is driving a 0 to avoid unnecessary power dissipation.

Registers XBR0, XBR1, and XBR2 must be loaded with the appropriate values to select the digital I/O functions required by the design. Setting the XBARE bit in XBR1 to 1 enables the Crossbar. Until the Crossbar is enabled, the external pins remain as standard Port I/O (in input mode), regardless of the XBRn Register settings. For given XBRn Register settings, one can determine the I/O pin-out using the Priority Decode Table; as an alternative, the Configuration Wizard utility of the Silicon Labs IDE software will determine the Port I/O pin-assignments based on the XBRn Register settings.

The Crossbar must be enabled to use Port pins as standard Port I/O in output mode. Port output drivers are disabled while the Crossbar is disabled.

SFR Definition 17.1. XBR0: Port I/O Crossbar Register 0

Bit	7	6	5	4	3	2	1	0
Name					SYSCKE	SMB0E	SPI0E	URT0E
Type	R	R	R	R	R/W	R/W	R/W	R/W
Reset	0	0	0	0	0	0	0	0

SFR Address = 0xE1

Bit	Name	Function
7:4	Unused	Unused. Read = 0000b. Write = don't care.
3	SYSCKE	**/SYSCLK Output Enable.** The source of this signal is determined by the OUTCLK bit (see SFR Definition 16.1). 0: /SYSCLK unavailable at Port pin. 1: /SYSCLK output routed to Port pin.
2	SMB0E	**SMBus I/O Enable.** 0: SMBus I/O unavailable at Port pins. 1: SMBus I/O routed to Port pins.
1	SPI0E	**SPI I/O Enable.** 0: SPI I/O unavailable at Port pins. 1: SPI I/O routed to Port pins. Note that the SPI can be assigned either 3 or 4 GPIO pins.
0	URT0E	**UART I/O Output Enable.** 0: UART I/O unavailable at Port pin. 1: UART TX0, RX0 routed to Port pins P0.4 and P0.5.

SFR Definition 17.2. XBR1: Port I/O Crossbar Register 1

Bit	7	6	5	4	3	2	1	0
Name	WEAKPUD	XBARE	T1E	T0E	ECIE	PCA0ME[2:0]		
Type	R/W	R/W	R/W	R/W	R/W	R/W		
Reset	0	0	0	0	0	0	0	0

SFR Address = 0xE2

Bit	Name	Function
7	WEAKPUD	**Port I/O Weak Pullup Disable.** 0: Weak Pullups enabled (except for Ports whose I/O are configured for analog mode). 1: Weak Pullups disabled.
6	XBARE	**Crossbar Enable.** 0: Crossbar disabled. 1: Crossbar enabled.
5	T1E	**T1 Enable.** 0: T1 unavailable at Port pin. 1: T1 routed to Port pin.
4	T0E	**T0 Enable.** 0: T0 unavailable at Port pin. 1: T0 routed to Port pin.
3	ECIE	**PCA0 External Counter Input Enable.** 0: ECI unavailable at Port pin. 1: ECI routed to Port pin.
2:0	PCA0ME[2:0]	**PCA Module I/O Enable Bits.** 000: All PCA I/O unavailable at Port pins. 001: CEX0 routed to Port pin. 010: CEX0, CEX1 routed to Port pins. 011: CEX0, CEX1, CEX2 routed to Port pins. 100-111: Reserved.

SFR Definition 17.3. XBR2: Port I/O Crossbar Register 2

Bit	7	6	5	4	3	2	1	0
Name								URT1E
Type	R	R	R	R	R	R	R	R/W
Reset	0	0	0	0	0	0	0	0

SFR Address = 0xE3

Bit	Name	Function
7:1	Unused	Unused. Read = 0000000b; Write = Don't Care.
0	URT1E	**UART1 I/O Output Enable Bit.** 0: UART1 I/O unavailable at Port pins. 1: UART1 TX1, RX1 routed to Port pins.

17.5. Port Match

Port match functionality allows system events to be triggered by a logic value change on P0 or P1. A software controlled value stored in the PnMATCH registers specifies the expected or normal logic values of P0 and P1. A Port mismatch event occurs if the logic levels of the Port's input pins no longer match the software controlled value. This allows Software to be notified if a certain change or pattern occurs on P0 or P1 input pins regardless of the XBRn settings.

The PnMASK registers can be used to individually select which P0 and P1 pins should be compared against the PnMATCH registers. A Port mismatch event is generated if (P0 & P0MASK) does not equal (P0MATCH & P0MASK) or if (P1 & P1MASK) does not equal (P1MATCH & P1MASK).

A Port mismatch event may be used to generate an interrupt or wake the device from a low power mode, such as IDLE or SUSPEND. See the Interrupts and Power Options chapters for more details on interrupt and wake-up sources.

SFR Definition 17.4. P0MASK: Port 0 Mask Register

Bit	7	6	5	4	3	2	1	0
Name	P0MASK[7:0]							
Type	R/W							
Reset	0	0	0	0	0	0	0	0

SFR Address = 0xAE

Bit	Name	Function
7:0	P0MASK[7:0]	**Port 0 Mask Value.** Selects P0 pins to be compared to the corresponding bits in P0MAT. 0: P0.n pin logic value is ignored and cannot cause a Port Mismatch event. 1: P0.n pin logic value is compared to P0MAT.n.

SFR Definition 17.5. P0MAT: Port 0 Match Register

Bit	7	6	5	4	3	2	1	0
Name	P0MAT[7:0]							
Type	R/W							
Reset	1	1	1	1	1	1	1	1

SFR Address = 0x84

Bit	Name	Function
7:0	P0MAT[7:0]	**Port 0 Match Value.** Match comparison value used on Port 0 for bits in P0MASK which are set to 1. 0: P0.n pin logic value is compared with logic LOW. 1: P0.n pin logic value is compared with logic HIGH.

SFR Definition 17.6. P1MASK: Port 1 Mask Register

Bit	7	6	5	4	3	2	1	0
Name	P1MASK[7:0]							
Type	R/W							
Reset	0	0	0	0	0	0	0	0

SFR Address = 0xBA

Bit	Name	Function
7:0	P1MASK[7:0]	**Port 1 Mask Value.** Selects P1 pins to be compared to the corresponding bits in P1MAT. 0: P1.n pin logic value is ignored and cannot cause a Port Mismatch event. 1: P1.n pin logic value is compared to P1MAT.n.

SFR Definition 17.7. P1MAT: Port 1 Match Register

Bit	7	6	5	4	3	2	1	0
Name	P1MAT[7:0]							
Type	R/W							
Reset	1	1	1	1	1	1	1	1

SFR Address = 0xB6

Bit	Name	Function
7:0	P1MAT[7:0]	**Port 1 Match Value.** Match comparison value used on Port 1 for bits in P1MASK which are set to 1. 0: P1.n pin logic value is compared with logic LOW. 1: P1.n pin logic value is compared with logic HIGH.

17.6. Special Function Registers for Accessing and Configuring Port I/O

All Port I/O are accessed through corresponding special function registers (SFRs) that are both byte addressable and bit addressable. When writing to a Port, the value written to the SFR is latched to maintain the output data value at each pin. When reading, the logic levels of the Port's input pins are returned regardless of the XBRn settings (i.e., even when the pin is assigned to another signal by the Crossbar, the Port register can always read its corresponding Port I/O pin). The exception to this is the execution of the read-modify-write instructions that target a Port Latch register as the destination. The read-modify-write instructions when operating on a Port SFR are the following: ANL, ORL, XRL, JBC, CPL, INC, DEC, DJNZ and MOV, CLR or SETB, when the destination is an individual bit in a Port SFR. For these instructions, the value of the latch register (not the pin) is read, modified, and written back to the SFR.

Each Port has a corresponding PnSKIP register which allows its individual Port pins to be assigned to digital functions or skipped by the Crossbar. All Port pins used for analog functions or GPIO should have their PnSKIP bit set to 1.

The Port input mode of the I/O pins is defined using the Port Input Mode registers (PnMDIN). Each Port cell can be configured for analog or digital I/O. This selection is required even for the digital resources selected in the XBRn registers, and is not automatic. The only exception to this is P2.0, which can only be used for digital I/O.

The output driver characteristics of the I/O pins are defined using the Port Output Mode registers (PnMDOUT). Each Port Output driver can be configured as either open drain or push-pull. This selection is required even for the digital resources selected in the XBRn registers, and is not automatic. The only exception to this is the SMBus (SDA, SCL) pins, which are configured as open-drain regardless of the PnMDOUT settings.

SFR Definition 17.8. P0: Port 0

Bit	7	6	5	4	3	2	1	0
Name	P0[7:0]							
Type	R/W							
Reset	1	1	1	1	1	1	1	1

SFR Address = 0x80; Bit-Addressable

Bit	Name	Description	Write	Read
7:0	P0[7:0]	**Port 0 Data.** Sets the Port latch logic value or reads the Port pin logic state in Port cells configured for digital I/O.	0: Set output latch to logic LOW. 1: Set output latch to logic HIGH.	0: P0.n Port pin is logic LOW. 1: P0.n Port pin is logic HIGH.

SFR Definition 17.9. P0MDIN: Port 0 Input Mode

Bit	7	6	5	4	3	2	1	0
Name	P0MDIN[7:0]							
Type	R/W							
Reset	1	1	1	1	1	1	1	1

SFR Address = 0xF1

Bit	Name	Function
7:0	P0MDIN[7:0]	**Analog Configuration Bits for P0.7–P0.0 (respectively).** Port pins configured for analog mode have their weak pullup, digital driver, and digital receiver disabled. 0: Corresponding P0.n pin is configured for analog mode. 1: Corresponding P0.n pin is not configured for analog mode.

SFR Definition 17.10. P0MDOUT: Port 0 Output Mode

Bit	7	6	5	4	3	2	1	0
Name	P0MDOUT[7:0]							
Type	R/W							
Reset	0	0	0	0	0	0	0	0

SFR Address = 0xA4

Bit	Name	Function
7:0	P0MDOUT[7:0]	**Output Configuration Bits for P0.7–P0.0 (respectively).** These bits are ignored if the corresponding bit in register P0MDIN is logic 0. 0: Corresponding P0.n Output is open-drain. 1: Corresponding P0.n Output is push-pull.

SFR Definition 17.11. P0SKIP: Port 0 Skip

Bit	7	6	5	4	3	2	1	0
Name	P0SKIP[7:0]							
Type	R/W							
Reset	0	0	0	0	0	0	0	0

SFR Address = 0xD4

Bit	Name	Function
7:0	P0SKIP[7:0]	**Port 0 Crossbar Skip Enable Bits.** These bits select Port 0 pins to be skipped by the Crossbar Decoder. Port pins used for analog, special functions or GPIO should be skipped by the Crossbar. 0: Corresponding P0.n pin is not skipped by the Crossbar. 1: Corresponding P0.n pin is skipped by the Crossbar.

SFR Definition 17.12. P1: Port 1

Bit	7	6	5	4	3	2	1	0
Name		P1[6:0]						
Type	R	R/W						
Reset	1	1	1	1	1	1	1	1

SFR Address = 0x90; Bit-Addressable

Bit	Name	Description	Write	Read
7	Unused	Unused. Read = 1b. Write = don’t care.		
6:0	P1[6:0]	**Port 1 Data.** Sets the Port latch logic value or reads the Port pin logic state in Port cells configured for digital I/O.	0: Set output latch to logic LOW. 1: Set output latch to logic HIGH.	0: P1.n Port pin is logic LOW. 1: P1.n Port pin is logic HIGH.

SFR Definition 17.13. P1MDIN: Port 1 Input Mode

Bit	7	6	5	4	3	2	1	0
Name		P1MDIN[6:0]						
Type	R	R/W						
Reset	0	1	1	1	1	1	1	1

SFR Address = 0xF2

Bit	Name	Function
7	Unused	Unused. Read = 0b. Write = don't care.
6:0	P1MDIN[6:0]	**Analog Configuration Bits for P1.6–P1.0 (respectively).** Port pins configured for analog mode have their weak pullup, digital driver, and digital receiver disabled. 0: Corresponding P1.n pin is configured for analog mode. 1: Corresponding P1.n pin is not configured for analog mode. **Note:** P1.6 is not available on all devices

SFR Definition 17.14. P1MDOUT: Port 1 Output Mode

Bit	7	6	5	4	3	2	1	0
Name		P1MDOUT[6:0]						
Type	R	R/W						
Reset	0	0	0	0	0	0	0	0

SFR Address = 0xA5

Bit	Name	Function
7	Unused	Unused/ Read = 0b. Write = don't care.
6:0	P1MDOUT[6:0]	**Output Configuration Bits for P1.7–P1.0 (respectively).** These bits are ignored if the corresponding bit in register P1MDIN is logic 0. 0: Corresponding P1.n Output is open-drain. 1: Corresponding P1.n Output is push-pull. **Note:** P1.6 is not available on all devices

SFR Definition 17.15. P1SKIP: Port 1 Skip

Bit	7	6	5	4	3	2	1	0
Name		P1SKIP[6:0]						
Type	R	R/W						
Reset	0	0	0	0	0	0	0	0

SFR Address = 0xD5

Bit	Name	Function
7	Unused	Unused. Read = 0b. Write = don't care.
6:0	P1SKIP[6:0]	**Port 1 Crossbar Skip Enable Bits.** These bits select Port 1 pins to be skipped by the Crossbar Decoder. Port pins used for analog, special functions or GPIO should be skipped by the Crossbar. 0: Corresponding P1.n pin is not skipped by the Crossbar. 1: Corresponding P1.n pin is skipped by the Crossbar. **Note:** P1.6 is not available on all devices

SFR Definition 17.16. P2: Port 2

Bit	7	6	5	4	3	2	1	0
Name								P2[0]
Type	R	R	R	R		R	R	R/W
Reset	0	0	0	0	0	0	0	1

SFR Address = 0xA0; Bit-Addressable

Bit	Name	Description	Write	Read
7:1	P2[7:0]	**Unused.**	Don't Care	0000000b
0	P2[0]	**Port 2 Data.** Sets the Port latch logic value or reads the Port pin logic state in Port cells configured for digital I/O.	0: Set output latch to logic LOW. 1: Set output latch to logic HIGH.	0: P2.0 Port pin is logic LOW. 1: P2.0 Port pin is logic HIGH.

SFR Definition 17.17. P2MDOUT: Port 2 Output Mode

Bit	7	6	5	4	3	2	1	0
Name								P2MDOUT[0]
Type	R	R	R	R	R	R	R	R/W
Reset	0	0	0	0	0	0	0	0

SFR Address = 0xA6

Bit	Name	Function
7:1	Unused	Unused. Read = 0000000b. Write = don't care.
0	P2MDOUT[0]	**Output Configuration Bit for P2.0..** 0: P2.0 Output is open-drain. 1: P2.0 Output is push-pull.

18. Universal Serial Bus Controller (USB0)

C8051T622/3 and C8051T326/7 devices include a complete Full/Low Speed USB function for USB peripheral implementations. The USB Function Controller (USB0) consists of a Serial Interface Engine (SIE), USB Transceiver (including matching resistors and configurable pull-up resistors), 256-Byte FIFO block, and clock recovery mechanism for crystal-less operation. No external components are required. The USB Function Controller and Transceiver is Universal Serial Bus Specification 2.0 compliant.

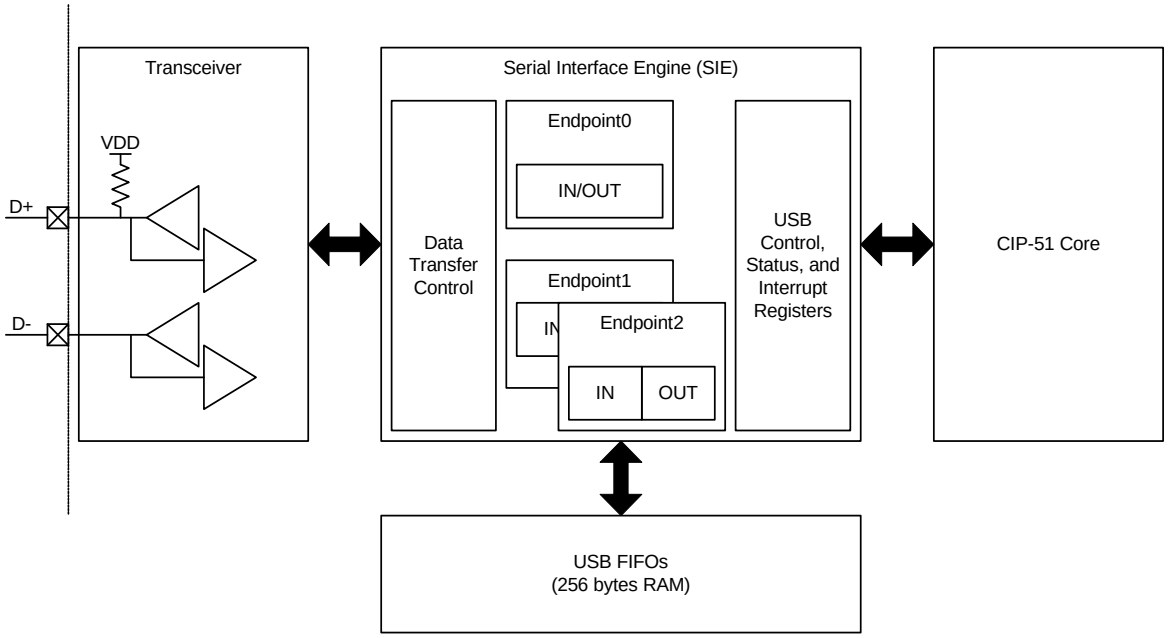

Figure 18.1. USB0 Block Diagram

Important Note: This document assumes a comprehensive understanding of the USB Protocol. Terms and abbreviations used in this document are defined in the USB Specification. We encourage you to review the latest version of the USB Specification before proceeding.

Note: The C8051T622/3 and C8051T326/7 cannot be used as a USB Host device.

18.1. Endpoint Addressing

A total of six endpoint pipes are available. The control endpoint (Endpoint0) always functions as a bi-directional IN/OUT endpoint. The other endpoints are implemented as two pairs of IN/OUT endpoint pipes:

Table 18.1. Endpoint Addressing Scheme

Endpoint	Associated Pipes	USB Protocol Address
Endpoint0	Endpoint0 IN	0x00
	Endpoint0 OUT	0x00
Endpoint1	Endpoint1 IN	0x81
	Endpoint1 OUT	0x01
Endpoint2	Endpoint2 IN	0x82
	Endpoint2 OUT	0x02

18.2. USB Transceiver

The USB Transceiver is configured via the USB0XCN register shown in SFR Definition 18.1. This configuration includes Transceiver enable/disable, pull-up resistor enable/disable, and device speed selection (Full or Low Speed). When bit SPEED = 1, USB0 operates as a Full Speed USB function, and the on-chip pull-up resistor (if enabled) appears on the D+ pin. When bit SPEED = 0, USB0 operates as a Low Speed USB function, and the on-chip pull-up resistor (if enabled) appears on the D- pin. Bits4-0 of register USB0XCN can be used for Transceiver testing as described in SFR Definition 18.1. The pull-up resistor is enabled only when VBUS is present (see Section “7.1.2. VBUS Detection” on page 35 for details on VBUS detection).

Important Note: The USB clock should be active before the Transceiver is enabled.

SFR Definition 18.1. USB0XCN: USB0 Transceiver Control

Bit	7	6	5	4	3	2	1	0
Name	PREN	PHYEN	SPEED	PHYTST[1:0]		DFREC	Dp	Dn
Type	R/W	R/W	R/W	R/W		R	R	R
Reset	0	0	0	0	0	0	0	0

SFR Address = 0xD7

Bit	Name	Function
7	PREN	**Internal Pull-up Resistor Enable.** The location of the pull-up resistor (D+ or D-) is determined by the SPEED bit. 0: Internal pull-up resistor disabled (device effectively detached from USB network). 1: Internal pull-up resistor enabled when VBUS is present (device attached to the USB network).
6	PHYEN	**Physical Layer Enable.** 0: USB0 physical layer Transceiver disabled (suspend). 1: USB0 physical layer Transceiver enabled (normal).
5	SPEED	**USB0 Speed Select.** This bit selects the USB0 speed. 0: USB0 operates as a Low Speed device. If enabled, the internal pull-up resistor appears on the D– line. 1: USB0 operates as a Full Speed device. If enabled, the internal pull-up resistor appears on the D+ line.
4:3	PHYTST[1:0]	**Physical Layer Test Bits.** 00: Mode 0: Normal (non-test mode) (D+ = X, D- = X) 01: Mode 1: Differential 1 Forced (D+ = 1, D- = 0) 10: Mode 2: Differential 0 Forced (D+ = 0, D- = 1) 11: Mode 3: Single-Ended 0 Forced (D+ = 0, D– = 0)
2	DFREC	**Differential Receiver Bit** The state of this bit indicates the current differential value present on the D+ and D- lines when PHYEN = 1. 0: Differential 0 signalling on the bus. 1: Differential 1 signalling on the bus.
1	Dp	**D+ Signal Status.** This bit indicates the current logic level of the D+ pin. 0: D+ signal currently at logic 0. 1: D+ signal currently at logic 1.
0	Dn	**D– Signal Status.** This bit indicates the current logic level of the D- pin. 0: D- signal currently at logic 0. 1: D- signal currently at logic 1.

18.3. USB Register Access

The USB0 controller registers listed in Table 18.2 are accessed through two SFRs: USB0 Address (USB0ADR) and USB0 Data (USB0DAT). The USB0ADR register selects which USB register is targeted by reads/writes of the USB0DAT register. See Figure 18.2.

Endpoint control/status registers are accessed by first writing the USB register INDEX with the target endpoint number. Once the target endpoint number is written to the INDEX register, the control/status registers associated with the target endpoint may be accessed. See the “Indexed Registers” section of Table 18.2 for a list of endpoint control/status registers.

Important Note: The USB clock must be active when accessing USB registers.

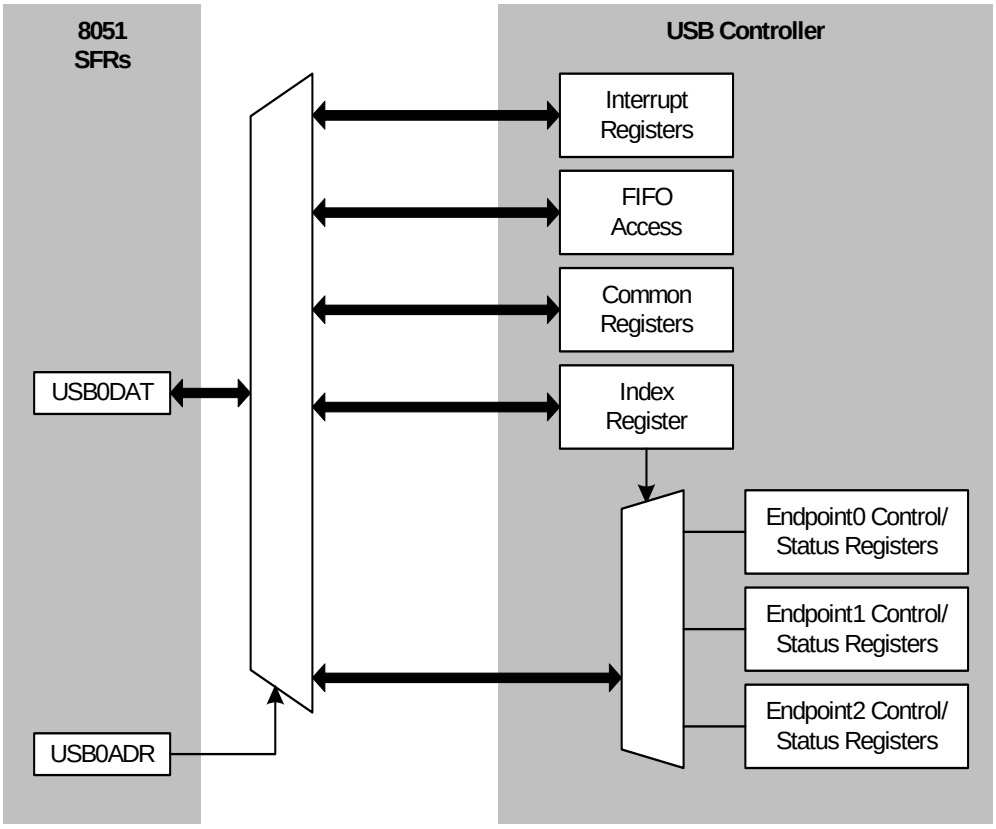

Figure 18.2. USB0 Register Access Scheme

SFR Definition 18.2. USB0ADR: USB0 Indirect Address

Bit	7	6	5	4	3	2	1	0
Name	BUSY	AUTORD	USBADDR[5:0]					
Type	R/W	R/W	R/W					
Reset	0	0	0	0	0	0	0	0

SFR Address = 0x96

Bit	Name	Description	Write	Read
7	BUSY	**USB0 Register Read Busy Flag.** This bit is used during indirect USB0 register accesses.	0: No effect. 1: A USB0 indirect register read is initiated at the address specified by the USBADDR bits.	0: USB0DAT register data is valid. 1: USB0 is busy accessing an indirect register; USB0DAT register data is invalid.
6	AUTORD	**USB0 Register Auto-read Flag.** This bit is used for block FIFO reads. 0: BUSY must be written manually for each USB0 indirect register read. 1: The next indirect register read will automatically be initiated when software reads USB0DAT (USBADDR bits will not be changed).		
5:0	USBADDR[5:0]	**USB0 Indirect Register Address Bits.** These bits hold a 6-bit address used to indirectly access the USB0 core registers. Table 18.2 lists the USB0 core registers and their indirect addresses. Reads and writes to USB0DAT will target the register indicated by the USBADDR bits.		

SFR Definition 18.3. USB0DAT: USB0 Data

Bit	7	6	5	4	3	2	1	0
Name	USB0DAT[7:0]							
Type	R/W							
Reset	0	0	0	0	0	0	0	0

SFR Address = 0x97

Bit	Name	Description	Write	Read
7:0	USB0DAT[7:0]	**USB0 Data Bits.** This SFR is used to indirectly read and write USB0 registers.	Write Procedure: 1. Poll for BUSY (USB0ADR.7) => 0. 2. Load the target USB0 register address into the USBADDR bits in register USB0ADR. 3. Write data to USB0DAT. 4. Repeat (Step 2 may be skipped when writing to the same USB0 register).	Read Procedure: 1. Poll for BUSY (USB0ADR.7) => 0. 2. Load the target USB0 register address into the USBADDR bits in register USB0ADR. 3. Write 1 to the BUSY bit in register USB0ADR (steps 2 and 3 can be performed in the same write). 4. Poll for BUSY (USB0ADR.7) => 0. 5. Read data from USB0DAT. 6. Repeat from Step 2 (Step 2 may be skipped when reading the same USB0 register; Step 3 may be skipped when the AUTORD bit (USB0ADR.6) is logic 1).

Table 18.2. USB0 Controller Registers

USB Register Name	USB Register Address	Description	Page Number
Interrupt Registers			
IN1INT	0x02	Endpoint0 and Endpoints1-2 IN Interrupt Flags	131
OUT1INT	0x04	Endpoints1-2 OUT Interrupt Flags	132
CMINT	0x06	Common USB Interrupt Flags	133
IN1IE	0x07	Endpoint0 and Endpoints1-2 IN Interrupt Enables	134
OUT1IE	0x09	Endpoints1-2 OUT Interrupt Enables	135
CMIE	0x0B	Common USB Interrupt Enables	136
Common Registers			
FADDR	0x00	Function Address	127
POWER	0x01	Power Management	129
FRAMEL	0x0C	Frame Number Low Byte	130
FRAMEH	0x0D	Frame Number High Byte	130
INDEX	0x0E	Endpoint Index Selection	123
CLKREC	0x0F	Clock Recovery Control	124
EENABLE	0x1E	Endpoint Enable	141
FIFOn	0x20-0x22	Endpoints0-2 FIFOs	126
Indexed Registers			
E0CSR	0x11	Endpoint0 Control / Status	139
EINCSRL		Endpoint IN Control / Status Low Byte	143
EINCSRH	0x12	Endpoint IN Control / Status High Byte	144
EOUTCSRL	0x14	Endpoint OUT Control / Status Low Byte	146
EOUTCSRH	0x15	Endpoint OUT Control / Status High Byte	147
E0CNT	0x16	Number of Received Bytes in Endpoint0 FIFO	140
EOUTCNTL		Endpoint OUT Packet Count Low Byte	147
EOUTCNTH	0x17	Endpoint OUT Packet Count High Byte	148

USB Register Definition 18.4. INDEX: USB0 Endpoint Index

Bit	7	6	5	4	3	2	1	0
Name					EPSEL[3:0]			
Type	R	R	R	R	R/W			
Reset	0	0	0	0	0	0	0	0

USB Register Address = 0x0E

Bit	Name	Function
7:4	Unused	Unused. Read = 0000b. Write = don't care.
3:0	EPSEL[3:0]	**Endpoint Select Bits.** These bits select which endpoint is targeted when indexed USB0 registers are accessed. 0000: Endpoint 0 0001: Endpoint 1 0010: Endpoint 2 0011-1111: Reserved.

18.4. USB Clock Configuration

USB0 is capable of communication as a Full or Low Speed USB function. Communication speed is selected via the SPEED bit in SFR USB0XCN. When operating as a Low Speed function, the USB0 clock must be 6 MHz. When operating as a Full Speed function, the USB0 clock must be 48 MHz. Clock options are described in Section "16. Oscillators and Clock Selection" on page 86. The USB0 clock is selected via SFR CLKSEL (see SFR Definition 16.1).

Clock Recovery circuitry uses the incoming USB data stream to adjust the internal oscillator; this allows the internal oscillator to meet the requirements for USB clock tolerance. Clock Recovery should be used in the following configurations:

Communication Speed	USB Clock
Full Speed	Internal Oscillator
Low Speed	Internal Oscillator / 8

When operating USB0 as a Low Speed function with Clock Recovery, software must write 1 to the CRLOW bit to enable Low Speed Clock Recovery. Clock Recovery is typically not necessary in Low Speed mode.

Single Step Mode can be used to help the Clock Recovery circuitry to lock when high noise levels are present on the USB network. This mode is not required (or recommended) in typical USB environments.

USB Register Definition 18.5. CLKREC: Clock Recovery Control

Bit	7	6	5	4	3	2	1	0
Name	CRE	CRSSEN	CRLOW	Reserved	Reserved	Reserved	Reserved	Reserved
Type	R/W	R/W	R/W	R/W	R/W	R/W	R/W	R/W
Reset	0	0	0	0	1	1	1	1

USB Register Address = 0x0F

Bit	Name	Function
7	CRE	**Clock Recovery Enable Bit.** This bit enables/disables the USB clock recovery feature. 0: Clock recovery disabled. 1: Clock recovery enabled.
6	CRSSEN	**Clock Recovery Single Step.** This bit forces the oscillator calibration into ‘single-step’ mode during clock recovery. 0: Normal calibration mode. 1: Single step mode.
5	CRLOW	**Low Speed Clock Recovery Mode.** This bit must be set to 1 if clock recovery is used when operating as a Low Speed USB device. 0: Full Speed Mode. 1: Low Speed Mode.
4:0	Reserved	Reserved. Read = Variable. Must Write = 01111b.

18.5. FIFO Management

256 bytes of on-chip XRAM are used as FIFO space for USB0. This FIFO space is split between Endpoints0-2 as shown in Figure 18.3. FIFO space allocated for Endpoints1-2 is configurable as IN, OUT, or both (Split Mode: half IN, half OUT).

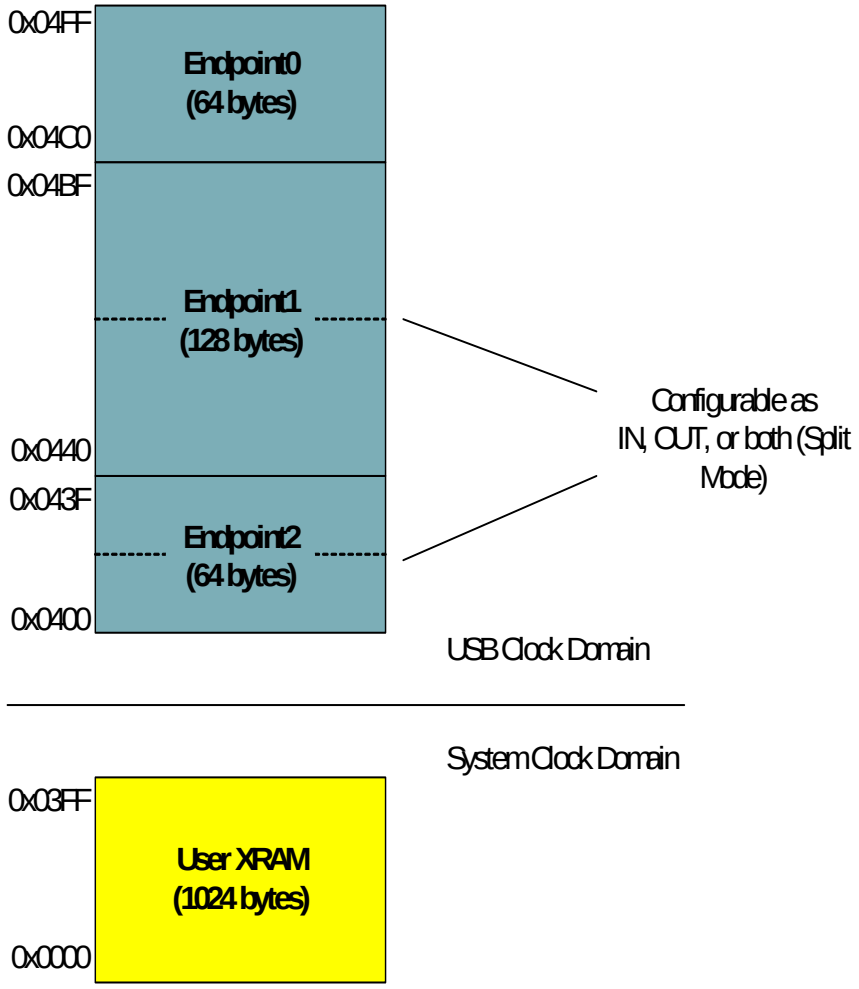

Figure 18.3. USB FIFO Allocation

18.5.1. FIFO Split Mode

The FIFO space for Endpoints1-2 can be split such that the upper half of the FIFO space is used by the IN endpoint, and the lower half is used by the OUT endpoint. For example: if the Endpoint1 FIFO is configured for Split Mode, the upper 64 bytes (0x0480 to 0x04BF) are used by Endpoint1 IN and the lower 64 bytes (0x0440 to 0x047F) are used by Endpoint1 OUT.

If an endpoint FIFO is not configured for Split Mode, that endpoint IN/OUT pair's FIFOs are combined to form a single IN *or* OUT FIFO. In this case only one direction of the endpoint IN/OUT pair may be used at a time. The endpoint direction (IN/OUT) is determined by the DIRSEL bit in the corresponding endpoint's EINCSRH register (see SFR Definition 18.13).

18.5.2. FIFO Double Buffering

FIFO slots for Endpoints1-2 can be configured for double-buffered mode. In this mode, the maximum packet size is halved and the FIFO may contain two packets at a time. This mode is available for Endpoints1-2. When an endpoint is configured for Split Mode, double buffering may be enabled for the IN Endpoint and/or the OUT endpoint. When Split Mode is not enabled, double-buffering may be enabled for the entire endpoint FIFO. See Table 18.3 for a list of maximum packet sizes for each FIFO configuration.

Table 18.3. FIFO Configurations

Endpoint Number	Split Mode Enabled?	Maximum IN Packet Size (Double Buffer Disabled / Enabled)	Maximum OUT Packet Size (Double Buffer Disabled / Enabled)
0	N/A	64	
1	N	128 / 64	
	Y	64 / 32	64 / 32
2	N	64/ 32	
	Y	32 / 16	32 / 16

18.5.1. FIFO Access

Each endpoint FIFO is accessed through a corresponding FIFOn register. A read of an endpoint FIFOn register unloads one byte from the FIFO; a write of an endpoint FIFOn register loads one byte into the endpoint FIFO. When an endpoint FIFO is configured for Split Mode, a read of the endpoint FIFOn register unloads one byte from the OUT endpoint FIFO; a write of the endpoint FIFOn register loads one byte into the IN endpoint FIFO.

USB Register Definition 18.6. FIFOn: USB0 Endpoint FIFO Access

Bit	7	6	5	4	3	2	1	0
Name	FIFODATA[7:0]							
Type	R/W							
Reset	0	0	0	0	0	0	0	0

USB Register Address = 0x20-0x22

Bit	Name	Function
7:0	FIFODATA[7:0]	**Endpoint FIFO Access Bits.** USB Addresses 0x20-0x22 provide access to the 4 pairs of endpoint FIFOs: 0x20: Endpoint 0 0x21: Endpoint 1 0x22: Endpoint 2 Writing to the FIFO address loads data into the IN FIFO for the corresponding endpoint. Reading from the FIFO address unloads data from the OUT FIFO for the corresponding endpoint.

18.6. Function Addressing

The FADDR register holds the current USB0 function address. Software should write the host-assigned 7-bit function address to the FADDR register when received as part of a SET_ADDRESS command. A new address written to FADDR will not take effect (USB0 will not respond to the new address) until the end of the current transfer (typically following the status phase of the SET_ADDRESS command transfer). The UPDATE bit (FADDR.7) is set to 1 by hardware when software writes a new address to the FADDR register. Hardware clears the UPDATE bit when the new address takes effect as described above.

USB Register Definition 18.7. FADDR: USB0 Function Address

Bit	7	6	5	4	3	2	1	0
Name	UPDATE	FADDR[6:0]						
Type	R	R/W						
Reset	0	0	0	0	0	0	0	0

USB Register Address = 0x00

Bit	Name	Function
7	UPDATE	**Function Address Update Bit.** Set to 1 when software writes the FADDR register. USB0 clears this bit to 0 when the new address takes effect. 0: The last address written to FADDR is in effect. 1: The last address written to FADDR is not yet in effect.
6:0	FADDR[6:0]	**Function Address Bits.** Holds the 7-bit function address for USB0. This address should be written by software when the SET_ADDRESS standard device request is received on Endpoint0. The new address takes effect when the device request completes.

18.7. Function Configuration and Control

The USB register POWER (USB Register Definition 18.8) is used to configure and control USB0 at the device level (enable/disable, Reset/Suspend/Resume handling, etc.).

USB Reset: The USBRST bit (POWER.3) is set to 1 by hardware when Reset signaling is detected on the bus. Upon this detection, the following occur:

1. The USB0 Address is reset (FADDR = 0x00).
2. Endpoint FIFOs are flushed.
3. Control/status registers are reset to 0x00 (E0CSR, EINCSRL, EINCSRH, EOUTCSRL, EOUTCSRH).
4. USB register INDEX is reset to 0x00.
5. All USB interrupts (excluding the Suspend interrupt) are enabled and their corresponding flags cleared.
6. A USB Reset interrupt is generated if enabled.

Writing a 1 to the USBRST bit will generate an asynchronous USB0 reset. All USB registers are reset to their default values following this asynchronous reset.

Suspend Mode: With Suspend Detection enabled (SUSEN = 1), USB0 will enter Suspend Mode when Suspend signaling is detected on the bus. An interrupt will be generated if enabled (SUSINTE = 1). The

Suspend Interrupt Service Routine (ISR) should perform application-specific configuration tasks such as disabling appropriate peripherals and/or configuring clock sources for low power modes. See Section "16.3. Programmable Internal High-Frequency (H-F) Oscillator" on page 89 for more details on internal oscillator configuration, including the Suspend mode feature of the internal oscillator.

USB0 exits Suspend mode when any of the following occur: (1) Resume signaling is detected or generated, (2) Reset signaling is detected, or (3) a device or USB reset occurs. If suspended, the internal oscillator will exit Suspend mode upon any of the above listed events.

Resume Signaling: USB0 will exit Suspend mode if Resume signaling is detected on the bus. A Resume interrupt will be generated upon detection if enabled (RESINTE = 1). Software may force a Remote Wakeup by writing 1 to the RESUME bit (POWER.2). When forcing a Remote Wakeup, software should write RESUME = 0 to end Resume signaling 10-15 ms after the Remote Wakeup is initiated (RESUME = 1).

ISO Update: When software writes 1 to the ISOUP bit (POWER.7), the ISO Update function is enabled. With ISO Update enabled, new packets written to an ISO IN endpoint will not be transmitted until a new Start-Of-Frame (SOF) is received. If the ISO IN endpoint receives an IN token before a SOF, USB0 will transmit a zero-length packet. When ISOUP = 1, ISO Update is enabled for all ISO endpoints.

USB Enable: USB0 is disabled following a Power-On-Reset (POR). USB0 is enabled by clearing the USBINH bit (POWER.4). Once written to 0, the USBINH can only be set to 1 by one of the following: (1) a Power-On-Reset (POR), or (2) an asynchronous USB0 reset generated by writing 1 to the USBRST bit (POWER.3).

Software should perform all USB0 configuration before enabling USB0. The configuration sequence should be performed as follows:

1. Select and enable the USB clock source.
2. Reset USB0 by writing USBRST= 1.
3. Configure and enable the USB Transceiver.
4. Perform any USB0 function configuration (interrupts, Suspend detect).
5. Enable USB0 by writing USBINH = 0.

USB Register Definition 18.8. POWER: USB0 Power

Bit	7	6	5	4	3	2	1	0
Name	ISOUD			USBINH	USBRST	RESUME	SUSMD	SUSEN
Type	R/W	R/W	R/W	R/W	R/W	R/W	R	R/W
Reset	0	0	0	1	0	0	0	0

USB Register Address = 0x01

Bit	Name	Function		
7	ISOUD	**ISO Update Bit.** This bit affects all IN Isochronous endpoints. 0: When software writes INPRDY = 1, USB0 will send the packet when the next IN token is received. 1: When software writes INPRDY = 1, USB0 will wait for a SOF token before sending the packet. If an IN token is received before a SOF token, USB0 will send a zero-length data packet.		
6:5	Unused	Unused. Read = 00b. Write = don't care.		
4	USBINH	**USB0 Inhibit Bit.** This bit is set to 1 following a power-on reset (POR) or an asynchronous USB0 reset. Software should clear this bit after all USB0 transceiver initialization is complete. Software cannot set this bit to 1. 0: USB0 enabled. 1: USB0 inhibited. All USB traffic is ignored.		
3	USBRST	**Reset Detect.**	**Read:** 0: Reset signaling is not present. 1: Reset signaling detected on the bus.	**Write:** Writing 1 to this bit forces an asynchronous USB0 reset.
2	RESUME	**Force Resume.** Writing a 1 to this bit while in Suspend mode (SUSMD = 1) forces USB0 to generate Resume signaling on the bus (a remote wakeup event). Software should write RESUME = 0 after 10 to 15 ms to end the Resume signaling. An interrupt is generated, and hardware clears SUSMD, when software writes RESUME = 0.		
1	SUSMD	**Suspend Mode.** Set to 1 by hardware when USB0 enters suspend mode. Cleared by hardware when software writes RESUME = 0 (following a remote wakeup) or reads the CMINT register after detection of Resume signaling on the bus. 0: USB0 not in suspend mode. 1: USB0 in suspend mode.		
0	SUSEN	**Suspend Detection Enable.** 0: Suspend detection disabled. USB0 will ignore suspend signaling on the bus. 1: Suspend detection enabled. USB0 will enter suspend mode if it detects suspend signaling on the bus.		

USB Register Definition 18.9. FRAMEL: USB0 Frame Number Low

Bit	7	6	5	4	3	2	1	0
Name	FRMEL[7:0]							
Type	R							
Reset	0	0	0	0	0	0	0	0

USB Register Address = 0x0C

Bit	Name	Function
7:0	FRMEL[7:0]	**Frame Number Low Bits.** This register contains bits 7-0 of the last received frame number.

USB Register Definition 18.10. FRAMEH: USB0 Frame Number High

Bit	7	6	5	4	3	2	1	0
Name						FRMEH[2:0]		
Type	R	R	R	R	R	R		
Reset	0	0	0	0	0	0	0	0

USB Register Address = 0x0D

Bit	Name	Function
7:3	Unused	Unused. Read = 00000b. Write = don't care.
2:0	FRMEH[2:0]	**Frame Number High Bits.** This register contains bits 10-8 of the last received frame number.

18.8. Interrupts

The read-only USB0 interrupt flags are located in the USB registers shown in USB Register Definition 18.11 through USB Register Definition 18.13. The associated interrupt enable bits are located in the USB registers shown in USB Register Definition 18.14 through USB Register Definition 18.16. A USB0 interrupt is generated when any of the USB interrupt flags is set to 1. The USB0 interrupt is enabled via the EIE1 SFR (see Section "12. Interrupts" on page 60).

Important Note: Reading a USB interrupt flag register resets all flags in that register to 0.

USB Register Definition 18.11. IN1INT: USB0 IN Endpoint Interrupt

Bit	7	6	5	4	3	2	1	0
Name						IN2	IN1	EP0
Type	R	R	R	R	R	R	R	R
Reset	0	0	0	0	0	0	0	0

USB Register Address = 0x02

Bit	Name	Function
7:3	Unused	Unused. Read = 00000b. Write = don't care.
2	IN2	**IN Endpoint 2 Interrupt-Pending Flag.** This bit is cleared when software reads the IN1INT register. 0: IN Endpoint 2 interrupt inactive. 1: IN Endpoint 2 interrupt active.
1	IN1	**IN Endpoint 1 Interrupt-Pending Flag.** This bit is cleared when software reads the IN1INT register. 0: IN Endpoint 1 interrupt inactive. 1: IN Endpoint 1 interrupt active.
0	EP0	**Endpoint 0 Interrupt-Pending Flag.** This bit is cleared when software reads the IN1INT register. 0: Endpoint 0 interrupt inactive. 1: Endpoint 0 interrupt active.

USB Register Definition 18.12. OUT1INT: USB0 OUT Endpoint Interrupt

Bit	7	6	5	4	3	2	1	0
Name						OUT2	OUT1	
Type	R	R	R	R	R	R	R	R
Reset	0	0	0	0	0	0	0	0

USB Register Address = 0x04

Bit	Name	Function
7:3	Unused	Unused. Read = 00000b. Write = don't care.
2	OUT2	**OUT Endpoint 2 Interrupt-pending Flag.** This bit is cleared when software reads the OUT1INT register. 0: OUT Endpoint 2 interrupt inactive. 1: OUT Endpoint 2 interrupt active.
1	OUT1	**OUT Endpoint 1 Interrupt-pending Flag.** This bit is cleared when software reads the OUT1INT register. 0: OUT Endpoint 1 interrupt inactive. 1: OUT Endpoint 1 interrupt active.
0	Unused	Unused. Read = 0b. Write = don't care.

USB Register Definition 18.13. CMINT: USB0 Common Interrupt

Bit	7	6	5	4	3	2	1	0
Name					SOF	RSTINT	RSUINT	SUSINT
Type	R	R	R	R	R	R	R	R
Reset	0	0	0	0	0	0	0	0

USB Register Address = 0x06

Bit	Name	Function
7:4	Unused	Unused. Read = 0000b. Write = don't care.
3	SOF	**Start of Frame Interrupt Flag.** Set by hardware when a SOF token is received. This interrupt event is synthesized by hardware: an interrupt will be generated when hardware expects to receive a SOF event, even if the actual SOF signal is missed or corrupted. This bit is cleared when software reads the CMINT register. 0: SOF interrupt inactive. 1: SOF interrupt active.
2	RSTINT	**Reset Interrupt-pending Flag.** Set by hardware when Reset signaling is detected on the bus. This bit is cleared when software reads the CMINT register. 0: Reset interrupt inactive. 1: Reset interrupt active.
1	RSUINT	**Resume Interrupt-pending Flag.** Set by hardware when Resume signaling is detected on the bus while USB0 is in suspend mode. This bit is cleared when software reads the CMINT register. 0: Resume interrupt inactive. 1: Resume interrupt active.
0	SUSINT	**Suspend Interrupt-pending Flag.** When Suspend detection is enabled (bit SUSEN in register POWER), this bit is set by hardware when Suspend signaling is detected on the bus. This bit is cleared when software reads the CMINT register. 0: Suspend interrupt inactive. 1: Suspend interrupt active.

USB Register Definition 18.14. IN1IE: USB0 IN Endpoint Interrupt Enable

Bit	7	6	5	4	3	2	1	0
Name						IN2E	IN1E	EP0E
Type	R	R	R	R	R	R/W	R/W	R/W
Reset	0	0	0	0	0	1	1	1

USB Register Address = 0x07

Bit	Name	Function
7:3	Unused	Unused. Read = 00000b. Write = don't care.
2	IN2E	**IN Endpoint 2 Interrupt Enable.** 0: IN Endpoint 2 interrupt disabled. 1: IN Endpoint 2 interrupt enabled.
1	IN1E	**IN Endpoint 1 Interrupt Enable.** 0: IN Endpoint 1 interrupt disabled. 1: IN Endpoint 1 interrupt enabled.
0	EP0E	**Endpoint 0 Interrupt Enable.** 0: Endpoint 0 interrupt disabled. 1: Endpoint 0 interrupt enabled.

USB Register Definition 18.15. OUT1IE: USB0 OUT Endpoint Interrupt Enable

Bit	7	6	5	4	3	2	1	0
Name						OUT2E	OUT1E	
Type	R	R	R	R	R	R/W	R/W	R
Reset	0	0	0	0	0	1	1	0

USB Register Address = 0x09

Bit	Name	Function
7:3	Unused	Unused. Read = 00000b. Write = don't care.
2	OUT2E	**OUT Endpoint 2 Interrupt Enable.** 0: OUT Endpoint 2 interrupt disabled. 1: OUT Endpoint 2 interrupt enabled.
1	OUT1E	**OUT Endpoint 1 Interrupt Enable.** 0: OUT Endpoint 1 interrupt disabled. 1: OUT Endpoint 1 interrupt enabled.
0	Unused	Unused. Read = 0b. Write = don't care.

USB Register Definition 18.16. CMIE: USB0 Common Interrupt Enable

Bit	7	6	5	4	3	2	1	0
Name					SOFE	RSTINTE	RSUINTE	SUSINTE
Type	R	R	R	R	R/W	R/W	R/W	R/W
Reset	0	0	0	0	0	1	1	0

USB Register Address = 0x0B

Bit	Name	Function
7:4	Unused	Unused. Read = 0000b. Write = don't care.
3	SOFE	**Start of Frame Interrupt Enable.** 0: SOF interrupt disabled. 1: SOF interrupt enabled.
2	RSTINTE	**Reset Interrupt Enable.** 0: Reset interrupt disabled. 1: Reset interrupt enabled.
1	RSUINTE	**Resume Interrupt Enable.** 0: Resume interrupt disabled. 1: Resume interrupt enabled.
0	SUSINTE	**Suspend Interrupt Enable.** 0: Suspend interrupt disabled. 1: Suspend interrupt enabled.

18.9. The Serial Interface Engine

The Serial Interface Engine (SIE) performs all low level USB protocol tasks, interrupting the processor when data has successfully been transmitted or received. When receiving data, the SIE will interrupt the processor when a complete data packet has been received; appropriate handshaking signals are automatically generated by the SIE. When transmitting data, the SIE will interrupt the processor when a complete data packet has been transmitted and the appropriate handshake signal has been received.

The SIE will not interrupt the processor when corrupted/erroneous packets are received.

18.10. Endpoint0

Endpoint0 is managed through the USB register E0CSR (USB Register Definition 18.18). The INDEX register must be loaded with 0x00 to access the E0CSR register.

An Endpoint0 interrupt is generated when:

1. A data packet (OUT or SETUP) has been received and loaded into the Endpoint0 FIFO. The OPRDY bit (E0CSR.0) is set to 1 by hardware.
2. An IN data packet has successfully been unloaded from the Endpoint0 FIFO and transmitted to the host; INPRDY is reset to 0 by hardware.
3. An IN transaction is completed (this interrupt generated during the status stage of the transaction).
4. Hardware sets the STSTL bit (E0CSR.2) after a control transaction ended due to a protocol violation.

5. Hardware sets the SUEND bit (E0CSR.4) because a control transfer ended before firmware sets the DATAEND bit (E0CSR.3).

The E0CNT register (USB Register Definition 18.11) holds the number of received data bytes in the Endpoint0 FIFO.

Hardware will automatically detect protocol errors and send a STALL condition in response. Firmware may force a STALL condition to abort the current transfer. When a STALL condition is generated, the STSTL bit will be set to 1 and an interrupt generated. The following conditions will cause hardware to generate a STALL condition:

1. The host sends an OUT token during a OUT data phase after the DATAEND bit has been set to 1.
2. The host sends an IN token during an IN data phase after the DATAEND bit has been set to 1.
3. The host sends a packet that exceeds the maximum packet size for Endpoint0.
4. The host sends a non-zero length DATA1 packet during the status phase of an IN transaction.

Firmware sets the SDSTL bit (E0CSR.5) to 1.

18.10.1. Endpoint0 SETUP Transactions

All control transfers must begin with a SETUP packet. SETUP packets are similar to OUT packets, containing an 8-byte data field sent by the host. Any SETUP packet containing a command field of anything other than 8 bytes will be automatically rejected by USB0. An Endpoint0 interrupt is generated when the data from a SETUP packet is loaded into the Endpoint0 FIFO. Software should unload the command from the Endpoint0 FIFO, decode the command, perform any necessary tasks, and set the SOPRDY bit to indicate that it has serviced the OUT packet.

18.10.2. Endpoint0 IN Transactions

When a SETUP request is received that requires USB0 to transmit data to the host, one or more IN requests will be sent by the host. For the first IN transaction, firmware should load an IN packet into the Endpoint0 FIFO, and set the INPRDY bit (E0CSR.1). An interrupt will be generated when an IN packet is transmitted successfully. Note that no interrupt will be generated if an IN request is received before firmware has loaded a packet into the Endpoint0 FIFO. If the requested data exceeds the maximum packet size for Endpoint0 (as reported to the host), the data should be split into multiple packets; each packet should be of the maximum packet size excluding the last (residual) packet. If the requested data is an integer multiple of the maximum packet size for Endpoint0, the last data packet should be a zero-length packet signaling the end of the transfer. Firmware should set the DATAEND bit to 1 after loading into the Endpoint0 FIFO the last data packet for a transfer.

Upon reception of the first IN token for a particular control transfer, Endpoint0 is said to be in Transmit Mode. In this mode, only IN tokens should be sent by the host to Endpoint0. The SUEND bit (E0CSR.4) is set to 1 if a SETUP or OUT token is received while Endpoint0 is in Transmit Mode.

Endpoint0 will remain in Transmit Mode until any of the following occur:

1. USB0 receives an Endpoint0 SETUP or OUT token.
2. Firmware sends a packet less than the maximum Endpoint0 packet size.
3. Firmware sends a zero-length packet.

Firmware should set the DATAEND bit (E0CSR.3) to 1 when performing (2) and (3) above.

The SIE will transmit a NAK in response to an IN token if there is no packet ready in the IN FIFO (INPRDY = 0).

18.10.3. Endpoint0 OUT Transactions

When a SETUP request is received that requires the host to transmit data to USB0, one or more OUT requests will be sent by the host. When an OUT packet is successfully received by USB0, hardware will set the OPRDY bit (E0CSR.0) to 1 and generate an Endpoint0 interrupt. Following this interrupt, firmware should unload the OUT packet from the Endpoint0 FIFO and set the SOPRDY bit (E0CSR.6) to 1.

If the amount of data required for the transfer exceeds the maximum packet size for Endpoint0, the data will be split into multiple packets. If the requested data is an integer multiple of the maximum packet size for Endpoint0 (as reported to the host), the host will send a zero-length data packet signaling the end of the transfer.

Upon reception of the first OUT token for a particular control transfer, Endpoint0 is said to be in Receive Mode. In this mode, only OUT tokens should be sent by the host to Endpoint0. The SUEND bit (E0CSR.4) is set to 1 if a SETUP or IN token is received while Endpoint0 is in Receive Mode.

Endpoint0 will remain in Receive mode until:

1. The SIE receives a SETUP or IN token.
2. The host sends a packet less than the maximum Endpoint0 packet size.
3. The host sends a zero-length packet.

Firmware should set the DATAEND bit (E0CSR.3) to 1 when the expected amount of data has been received. The SIE will transmit a STALL condition if the host sends an OUT packet after the DATAEND bit has been set by firmware. An interrupt will be generated with the STSTL bit (E0CSR.2) set to 1 after the STALL is transmitted.

USB Register Definition 18.17. E0CSR: USB0 Endpoint0 Control

Bit	7	6	5	4	3	2	1	0
Name	SSUEND	SOPRDY	SDSTL	SUEND	DATAEND	STSTL	INPRDY	OPRDY
Type	R/W	R/W	R/W	R	R/W	R/W	R/W	R
Reset	0	0	0	0	0	0	0	0

USB Register Address = 0x11

Bit	Name	Description	Write	Read
7	SSUEND	**Serviced Setup End Bit.**	Software should set this bit to 1 after servicing a Setup End (bit SUEND) event. Hardware clears the SUEND bit when software writes 1 to SSUEND.	This bit always reads 0.
6	SOPRDY	**Serviced OPRDY Bit.**	Software should write 1 to this bit after servicing a received Endpoint0 packet. The OPRDY bit will be cleared by a write of 1 to SOPRDY.	This bit always reads 0.
5	SDSTL	**Send Stall Bit.** Software can write 1 to this bit to terminate the current transfer (due to an error condition, unexpected transfer request, etc.). Hardware will clear this bit to 0 when the STALL handshake is transmitted.		
4	SUEND	**Setup End Bit.** Hardware sets this read-only bit to 1 when a control transaction ends before software has written 1 to the DATAEND bit. Hardware clears this bit when software writes 1 to SSUEND.		
3	DATAEND	**Data End Bit.** Software should write 1 to this bit: 1) When writing 1 to INPRDY for the last outgoing data packet. 2) When writing 1 to INPRDY for a zero-length data packet. 3) When writing 1 to SOPRDY after servicing the last incoming data packet. This bit is automatically cleared by hardware.		
2	STSTL	**Sent Stall Bit.** Hardware sets this bit to 1 after transmitting a STALL handshake signal. This flag must be cleared by software.		
1	INPRDY	**IN Packet Ready Bit.** Software should write 1 to this bit after loading a data packet into the Endpoint0 FIFO for transmit. Hardware clears this bit and generates an interrupt under either of the following conditions: 1) The packet is transmitted. 2) The packet is overwritten by an incoming SETUP packet. 3) The packet is overwritten by an incoming OUT packet.		
0	OPRDY	**OUT Packet Ready Bit.** Hardware sets this read-only bit and generates an interrupt when a data packet has been received. This bit is cleared only when software writes 1 to the SOPRDY bit.		

USB Register Definition 18.18. E0CNT: USB0 Endpoint0 Data Count

Bit	7	6	5	4	3	2	1	0
Name		E0CNT[6:0]						
Type	R	R						
Reset	0	0	0	0	0	0	0	0

USB Register Address = 0x16

Bit	Name	Function
7	Unused	Unused. Read = 0b. Write = don't care.
6:0	E0CNT[6:0]	**Endpoint 0 Data Count.** This 7-bit number indicates the number of received data bytes in the Endpoint 0 FIFO. This number is only valid while bit OPRDY is a 1.

18.11. Configuring Endpoints1-2

Endpoints1-2 are configured and controlled through their own sets of the following control/status registers: IN registers EINCSRL and EINCSRH, and OUT registers EOUTCSRL and EOUTCSRH. Only one set of endpoint control/status registers is mapped into the USB register address space at a time, defined by the contents of the INDEX register (USB Register Definition 18.4).

Endpoints1-2 can be configured as IN, OUT, or both IN/OUT (Split Mode) as described in Section 18.5.1. The endpoint mode (Split/Normal) is selected via the SPLIT bit in register EINCSRH.

When SPLIT = 1, the corresponding endpoint FIFO is split, and both IN and OUT pipes are available.

When SPLIT = 0, the corresponding endpoint functions as either IN or OUT; the endpoint direction is selected by the DIRSEL bit in register EINCSRH.

Endpoints1-2 can be disabled individually by the corresponding bits in the ENABLE register. When an Endpoint is disabled, it will not respond to bus traffic or stall the bus. All Endpoints are enabled by default.

USB Register Definition 18.19. EENABLE: USB0 Endpoint Enable

Bit	7	6	5	4	3	2	1	0
Name						EEN2	EEN1	Reserved
Type	R	R	R	R	R	R/W	R/W	R/W
Reset	1	1	1	1	1	1	1	1

USB Register Address = 0x1E

Bit	Name	Function
7:3	Unused	Unused. Read = 11111b. Write = don't care.
2	EEN2	**Endpoint 2 Enable.** This bit enables/disables Endpoint 2. 0: Endpoint 2 is disabled (no NACK, ACK, or STALL on the USB network). 1: Endpoint 2 is enabled (normal).
1	EEN1	**Endpoint 1 Enable.** This bit enables/disables Endpoint 1. 0: Endpoint 1 is disabled (no NACK, ACK, or STALL on the USB network). 1: Endpoint 1 is enabled (normal).
0	Reserved	Reserved. Read = 1b. Must Write 1b.

18.12. Controlling Endpoints1-2 IN

Endpoints1-2 IN are managed via USB registers EINCSRL and EINCSRH. All IN endpoints can be used for Interrupt, Bulk, or Isochronous transfers. Isochronous (ISO) mode is enabled by writing 1 to the ISO bit in register EINCSRH. Bulk and Interrupt transfers are handled identically by hardware.

An Endpoint1-2 IN interrupt is generated by any of the following conditions:

1. An IN packet is successfully transferred to the host.
2. Software writes 1 to the FLUSH bit (EINCSRL.3) when the target FIFO is not empty.
3. Hardware generates a STALL condition.

18.12.1. Endpoints1-2 IN Interrupt or Bulk Mode

When the ISO bit (EINCSRH.6) = 0 the target endpoint operates in Bulk or Interrupt Mode. Once an endpoint has been configured to operate in Bulk/Interrupt IN mode (typically following an Endpoint0 SET_INTERFACE command), firmware should load an IN packet into the endpoint IN FIFO and set the INPRDY bit (EINCSRL.0). Upon reception of an IN token, hardware will transmit the data, clear the INPRDY bit, and generate an interrupt.

Writing 1 to INPRDY without writing any data to the endpoint FIFO will cause a zero-length packet to be transmitted upon reception of the next IN token.

A Bulk or Interrupt pipe can be shut down (or Halted) by writing 1 to the SDSTL bit (EINCSRL.4). While SDSTL = 1, hardware will respond to all IN requests with a STALL condition. Each time hardware generates a STALL condition, an interrupt will be generated and the STSTL bit (EINCSRL.5) set to 1. The STSTL bit must be reset to 0 by firmware.

Hardware will automatically reset INPRDY to 0 when a packet slot is open in the endpoint FIFO. Note that if double buffering is enabled for the target endpoint, it is possible for firmware to load two packets into the IN FIFO at a time. In this case, hardware will reset INPRDY to 0 immediately after firmware loads the first packet into the FIFO and sets INPRDY to 1. An interrupt will not be generated in this case; an interrupt will only be generated when a data packet is transmitted.

When firmware writes 1 to the FCDT bit (EINCSRH.3), the data toggle for each IN packet will be toggled continuously, regardless of the handshake received from the host. This feature is typically used by Interrupt endpoints functioning as rate feedback communication for Isochronous endpoints. When FCDT = 0, the data toggle bit will only be toggled when an ACK is sent from the host in response to an IN packet.

18.12.2. Endpoints1-2 IN Isochronous Mode

When the ISO bit (EINCSRH.6) is set to 1, the target endpoint operates in Isochronous (ISO) mode. Once an endpoint has been configured for ISO IN mode, the host will send one IN token (data request) per frame; the location of data within each frame may vary. Because of this, it is recommended that double buffering be enabled for ISO IN endpoints.

Hardware will automatically reset INPRDY (EINCSRL.0) to 0 when a packet slot is open in the endpoint FIFO. Note that if double buffering is enabled for the target endpoint, it is possible for firmware to load two packets into the IN FIFO at a time. In this case, hardware will reset INPRDY to 0 immediately after firmware loads the first packet into the FIFO and sets INPRDY to 1. An interrupt will not be generated in this case; an interrupt will only be generated when a data packet is transmitted.

If there is not a data packet ready in the endpoint FIFO when USB0 receives an IN token from the host, USB0 will transmit a zero-length data packet and set the UNDRUN bit (EINCSRL.2) to 1.

The ISO Update feature (see Section 18.7) can be useful in starting a double buffered ISO IN endpoint. If the host has already set up the ISO IN pipe (has begun transmitting IN tokens) when firmware writes the first data packet to the endpoint FIFO, the next IN token may arrive and the first data packet sent before firmware has written the second (double buffered) data packet to the FIFO. The ISO Update feature ensures that any data packet written to the endpoint FIFO will not be transmitted during the current frame; the packet will only be sent after a SOF signal has been received.

USB Register Definition 18.20. EINCSRL: USB0 IN Endpoint Control Low

Bit	7	6	5	4	3	2	1	0
Name		CLRDT	STSTL	SDSTL	FLUSH	UNDRUN	FIFONE	INPRDY
Type	R	W	R/W	R/W	R/W	R/W	R/W	R/W
Reset	0	0	0	0	0	0	0	0

USB Register Address = 0x11

Bit	Name	Description	Write	Read
7	Unused	Unused. Read = 0b. Write = don't care.		
6	CLRDT	**Clear Data Toggle Bit.**	Software should write 1 to this bit to reset the IN Endpoint data toggle to 0.	This bit always reads 0.
5	STSTL	**Sent Stall Bit.** Hardware sets this bit to 1 when a STALL handshake signal is transmitted. The FIFO is flushed, and the INPRDY bit cleared. This flag must be cleared by software.		
4	SDSTL	**Send Stall.** Software should write 1 to this bit to generate a STALL handshake in response to an IN token. Software should write 0 to this bit to terminate the STALL signal. This bit has no effect in ISO mode.		
3	FLUSH	**FIFO Flush Bit.** Writing a 1 to this bit flushes the next packet to be transmitted from the IN Endpoint FIFO. The FIFO pointer is reset and the INPRDY bit is cleared. If the FIFO contains multiple packets, software must write 1 to FLUSH for each packet. Hardware resets the FLUSH bit to 0 when the FIFO flush is complete.		
2	UNDRUN	**Data Underrun Bit.** The function of this bit depends on the IN Endpoint mode: ISO: Set when a zero-length packet is sent after an IN token is received while bit INPRDY = 0. Interrupt/Bulk: Set when a NAK is returned in response to an IN token. This bit must be cleared by software.		
1	FIFONE	**FIFO Not Empty.** 0: The IN Endpoint FIFO is empty. 1. The IN Endpoint FIFO contains one or more packets.		
0	INPRDY	**In Packet Ready.** Software should write 1 to this bit after loading a data packet into the IN Endpoint FIFO. Hardware clears INPRDY due to any of the following: 1) A data packet is transmitted. 2) Double buffering is enabled (DBIEN = 1) and there is an open FIFO packet slot. 3) If the endpoint is in Isochronous Mode (ISO = 1) and ISOUD = 1, INPRDY will read 0 until the next SOF is received. **Note:** An interrupt (if enabled) will be generated when hardware clears INPRDY as a result of a packet being transmitted.		

USB Register Definition 18.21. EINCSRH: USB0 IN Endpoint Control High

Bit	7	6	5	4	3	2	1	0
Name	DBIEN	ISO	DIRSEL		FCDT	SPLIT		
Type	R/W	R/W	R/W	R	R/W	R/W	R	R
Reset	0	0	0	0	0	0	0	0

USB Register Address = 0x12

Bit	Name	Function
7	DBIEN	**IN Endpoint Double-buffer Enable.** 0: Double-buffering disabled for the selected IN endpoint. 1: Double-buffering enabled for the selected IN endpoint.
6	ISO	**Isochronous Transfer Enable.** This bit enables/disables isochronous transfers on the current endpoint. 0: Endpoint configured for bulk/interrupt transfers. 1: Endpoint configured for isochronous transfers.
5	DIRSEL	**Endpoint Direction Select.** This bit is valid only when the selected FIFO is not split (SPLIT = 0). 0: Endpoint direction selected as OUT. 1: Endpoint direction selected as IN.
4	UNUSED	Unused. Read = 0b. Write = don't care.
3	FCDT	**Force Data Toggle Bit.** 0: Endpoint data toggle switches only when an ACK is received following a data packet transmission. 1: Endpoint data toggle forced to switch after every data packet is transmitted, regardless of ACK reception.
2	SPLIT	**FIFO Split Enable.** When SPLIT = 1, the selected endpoint FIFO is split. The upper half of the selected FIFO is used by the IN endpoint; the lower half of the selected FIFO is used by the OUT endpoint.
1:0	Unused	Unused. Read = 00b. Write = don't care.

18.13. Controlling Endpoints1-2 OUT

Endpoints1-2 OUT are managed via USB registers EOUTCSRL and EOUTCSRH. All OUT endpoints can be used for Interrupt, Bulk, or Isochronous transfers. Isochronous (ISO) mode is enabled by writing 1 to the ISO bit in register EOUTCSRH. Bulk and Interrupt transfers are handled identically by hardware.

An Endpoint1-2 OUT interrupt may be generated by the following:

1. Hardware sets the OPRDY bit (EINCSRL.0) to 1.
2. Hardware generates a STALL condition.

18.13.1. Endpoints1-2 OUT Interrupt or Bulk Mode

When the ISO bit (EOUTCSRH.6) = 0 the target endpoint operates in Bulk or Interrupt mode. Once an endpoint has been configured to operate in Bulk/Interrupt OUT mode (typically following an Endpoint0 SET_INTERFACE command), hardware will set the OPRDY bit (EOUTCSRL.0) to 1 and generate an interrupt upon reception of an OUT token and data packet. The number of bytes in the current OUT data packet (the packet ready to be unloaded from the FIFO) is given in the EOUTCNTH and EOUTCNTL registers. In response to this interrupt, firmware should unload the data packet from the OUT FIFO and reset the OPRDY bit to 0.

A Bulk or Interrupt pipe can be shut down (or Halted) by writing 1 to the SDSTL bit (EOUTCSRL.5). While SDSTL = 1, hardware will respond to all OUT requests with a STALL condition. Each time hardware generates a STALL condition, an interrupt will be generated and the STSTL bit (EOUTCSRL.6) set to 1. The STSTL bit must be reset to 0 by firmware.

Hardware will automatically set OPRDY when a packet is ready in the OUT FIFO. Note that if double buffering is enabled for the target endpoint, it is possible for two packets to be ready in the OUT FIFO at a time. In this case, hardware will set OPRDY to 1 immediately after firmware unloads the first packet and resets OPRDY to 0. A second interrupt will be generated in this case.

18.13.2. Endpoints1-2 OUT Isochronous Mode

When the ISO bit (EOUTCSRH.6) is set to 1, the target endpoint operates in Isochronous (ISO) mode. Once an endpoint has been configured for ISO OUT mode, the host will send exactly one data per USB frame; the location of the data packet within each frame may vary, however. Because of this, it is recommended that double buffering be enabled for ISO OUT endpoints.

Each time a data packet is received, hardware will load the received data packet into the endpoint FIFO, set the OPRDY bit (EOUTCSRL.0) to 1, and generate an interrupt (if enabled). Firmware would typically use this interrupt to unload the data packet from the endpoint FIFO and reset the OPRDY bit to 0.

If a data packet is received when there is no room in the endpoint FIFO, an interrupt will be generated and the OVRUN bit (EOUTCSRL.2) set to 1. If USB0 receives an ISO data packet with a CRC error, the data packet will be loaded into the endpoint FIFO, OPRDY will be set to 1, an interrupt (if enabled) will be generated, and the DATAERR bit (EOUTCSRL.3) will be set to 1. Software should check the DATAERR bit each time a data packet is unloaded from an ISO OUT endpoint FIFO.

USB Register Definition 18.22. EOUTCSRL: USB0 OUT Endpoint Control Low Byte

Bit	7	6	5	4	3	2	1	0
Name	CLRDT	STSTL	SDSTL	FLUSH	DATERR	OVRUN	FIFOFUL	OPRDY
Type	W	R/W	R/W	R/W	R	R/W	R	R/W
Reset	0	0	0	0	0	0	0	0

USB Register Address = 0x14

Bit	Name	Description	Write	Read
7	CLRDT	**Clear Data Toggle Bit.**	Software should write 1 to this bit to reset the OUT endpoint data toggle to 0.	This bit always reads 0.
6	STSTL	**Sent Stall Bit.** Hardware sets this bit to 1 when a STALL handshake signal is transmitted. This flag must be cleared by software.		
5	SDSTL	**Send Stall Bit.** Software should write 1 to this bit to generate a STALL handshake. Software should write 0 to this bit to terminate the STALL signal. This bit has no effect in ISO mode.		
4	FLUSH	**FIFO Flush Bit.** Writing a 1 to this bit flushes the next packet to be read from the OUT endpoint FIFO. The FIFO pointer is reset and the OPRDY bit is cleared. Multiple packets must be flushed individually. Hardware resets the FLUSH bit to 0 when the flush is complete. **Note:** If data for the current packet has already been read from the FIFO, the FLUSH bit should not be used to flush the packet. Instead, the FIFO should be read manually.		
3	DATERR	**Data Error Bit.** In ISO mode, this bit is set by hardware if a received packet has a CRC or bit-stuffing error. It is cleared when software clears OPRDY. This bit is only valid in ISO mode.		
2	OVRUN	**Data Overrun Bit.** This bit is set by hardware when an incoming data packet cannot be loaded into the OUT endpoint FIFO. This bit is only valid in ISO mode, and must be cleared by software. 0: No data overrun. 1: A data packet was lost because of a full FIFO since this flag was last cleared.		
1	FIFOFUL	**OUT FIFO Full.** This bit indicates the contents of the OUT FIFO. If double buffering is enabled (DBIEN = 1), the FIFO is full when the FIFO contains two packets. If DBIEN = 0, the FIFO is full when the FIFO contains one packet. 0: OUT endpoint FIFO is not full. 1: OUT endpoint FIFO is full.		
0	OPRDY	**OUT Packet Ready.** Hardware sets this bit to 1 and generates an interrupt when a data packet is available. Software should clear this bit after each data packet is unloaded from the OUT endpoint FIFO.		

USB Register Definition 18.23. EOUTCSRH: USB0 OUT Endpoint Control High Byte

Bit	7	6	5	4	3	2	1	0
Name	DBOEN	ISO						
Type	R/W	R/W	R	R	R	R	R	R
Reset	0	0	0	0	0	0	0	0

USB Register Address = 0x15

Bit	Name	Function
7	DBOEN	**Double-buffer Enable.** 0: Double-buffering disabled for the selected OUT endpoint. 1: Double-buffering enabled for the selected OUT endpoint.
6	ISO	**Isochronous Transfer Enable.** This bit enables/disables isochronous transfers on the current endpoint. 0: Endpoint configured for bulk/interrupt transfers. 1: Endpoint configured for isochronous transfers.
5:0	Unused	Unused. Read = 000000b. Write = don't care.

USB Register Definition 18.24. EOUTCNTL: USB0 OUT Endpoint Count Low

Bit	7	6	5	4	3	2	1	0
Name	EOCL[7:0]							
Type	R							
Reset	0	0	0	0	0	0	0	0

USB Register Address = 0x16

Bit	Name	Function
7:0	EOCL[7:0]	**OUT Endpoint Count Low Byte.** EOCL holds the lower 8-bits of the 10-bit number of data bytes in the last received packet in the current OUT endpoint FIFO. This number is only valid while OPRDY = 1.

USB Register Definition 18.25. EOUTCNTH: USB0 OUT Endpoint Count High

Bit	7	6	5	4	3	2	1	0
Name							EOCH[1:0]	
Type	R	R	R	R	R	R	R	R
Reset	0	0	0	0	0	0	0	0

USB Register Address = 0x17

Bit	Name	Function
7:2	Unused	Unused. Read = 000000b. Write = don't care.
1:0	EOCH[1:0]	**OUT Endpoint Count High Byte.** EOCH holds the upper 2-bits of the 10-bit number of data bytes in the last received packet in the current OUT endpoint FIFO. This number is only valid while OPRDY = 1.

19. SMBus

The SMBus I/O interface is a two-wire, bi-directional serial bus. The SMBus is compliant with the System Management Bus Specification, version 1.1, and compatible with the I^2C serial bus. Reads and writes to the interface by the system controller are byte oriented with the SMBus interface autonomously controlling the serial transfer of the data. Data can be transferred at up to 1/20th of the system clock as a master or slave (this can be faster than allowed by the SMBus specification, depending on the system clock used). A method of extending the clock-low duration is available to accommodate devices with different speed capabilities on the same bus.

The SMBus interface may operate as a master and/or slave, and may function on a bus with multiple masters. The SMBus provides control of SDA (serial data), SCL (serial clock) generation and synchronization, arbitration logic, and START/STOP control and generation. The SMBus peripheral can be fully driven by software (i.e., software accepts/rejects slave addresses, and generates ACKs), or hardware slave address recognition and automatic ACK generation can be enabled to minimize software overhead. A block diagram of the SMBus peripheral and the associated SFRs is shown in Figure 19.1.

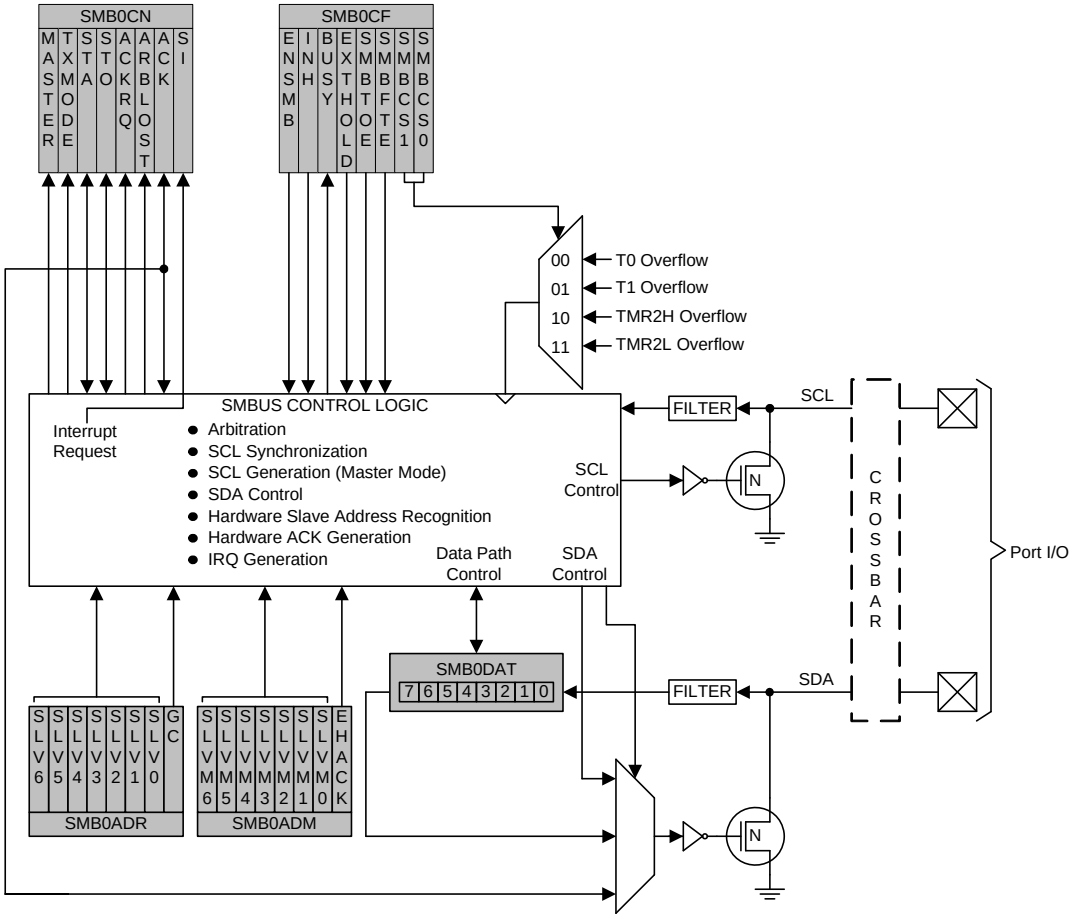

Figure 19.1. SMBus Block Diagram

19.1. Supporting Documents

It is assumed the reader is familiar with or has access to the following supporting documents:

1. The I^2C-Bus and How to Use It (including specifications), Philips Semiconductor.
2. The I^2C-Bus Specification—Version 2.0, Philips Semiconductor.
3. System Management Bus Specification—Version 1.1, SBS Implementers Forum.

19.2. SMBus Configuration

Figure 19.2 shows a typical SMBus configuration. The SMBus specification allows any recessive voltage between 3.0 V and 5.0 V; different devices on the bus may operate at different voltage levels. The bi-directional SCL (serial clock) and SDA (serial data) lines must be connected to a positive power supply voltage through a pullup resistor or similar circuit. Every device connected to the bus must have an open-drain or open-collector output for both the SCL and SDA lines, so that both are pulled high (recessive state) when the bus is free. The maximum number of devices on the bus is limited only by the requirement that the rise and fall times on the bus not exceed 300 ns and 1000 ns, respectively.

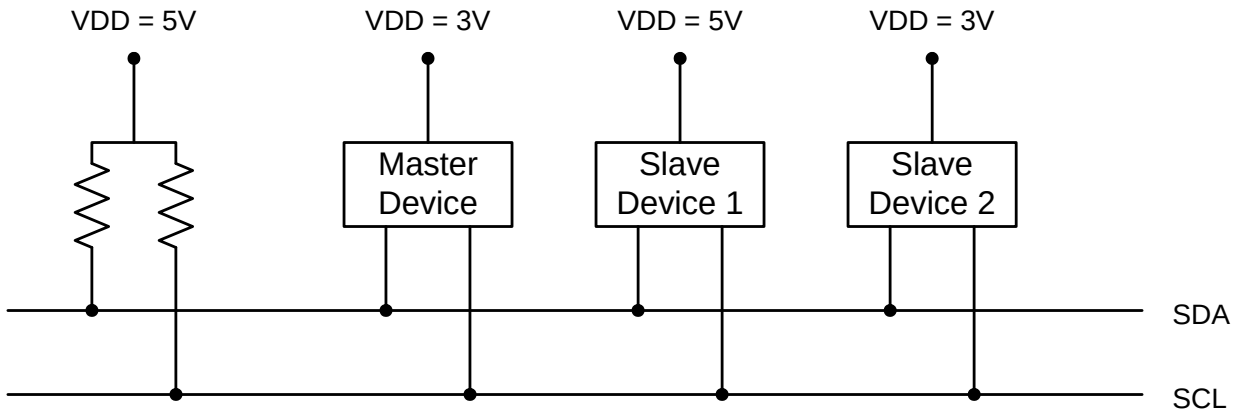

Figure 19.2. Typical SMBus Configuration

19.3. SMBus Operation

Two types of data transfers are possible: data transfers from a master transmitter to an addressed slave receiver (WRITE), and data transfers from an addressed slave transmitter to a master receiver (READ). The master device initiates both types of data transfers and provides the serial clock pulses on SCL. The SMBus interface may operate as a master or a slave, and multiple master devices on the same bus are supported. If two or more masters attempt to initiate a data transfer simultaneously, an arbitration scheme is employed with a single master always winning the arbitration. Note that it is not necessary to specify one device as the Master in a system; any device who transmits a START and a slave address becomes the master for the duration of that transfer.

A typical SMBus transaction consists of a START condition followed by an address byte (Bits7–1: 7-bit slave address; Bit0: R/W direction bit), one or more bytes of data, and a STOP condition. Bytes that are received (by a master or slave) are acknowledged (ACK) with a low SDA during a high SCL (see Figure 19.3). If the receiving device does not ACK, the transmitting device will read a NACK (not acknowledge), which is a high SDA during a high SCL.

The direction bit (R/W) occupies the least-significant bit position of the address byte. The direction bit is set to logic 1 to indicate a "READ" operation and cleared to logic 0 to indicate a "WRITE" operation.

All transactions are initiated by a master, with one or more addressed slave devices as the target. The master generates the START condition and then transmits the slave address and direction bit. If the transaction is a WRITE operation from the master to the slave, the master transmits the data a byte at a time waiting for an ACK from the slave at the end of each byte. For READ operations, the slave transmits the data waiting for an ACK from the master at the end of each byte. At the end of the data transfer, the master generates a STOP condition to terminate the transaction and free the bus. Figure 19.3 illustrates a typical SMBus transaction.

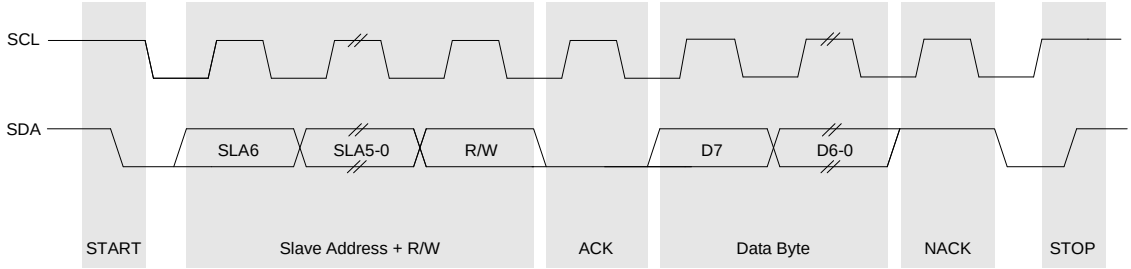

Figure 19.3. SMBus Transaction

19.3.1. Transmitter Vs. Receiver

On the SMBus communications interface, a device is the “transmitter” when it is sending an address or data byte to another device on the bus. A device is a “receiver” when an address or data byte is being sent to it from another device on the bus. The transmitter controls the SDA line during the address or data byte. After each byte of address or data information is sent by the transmitter, the receiver sends an ACK or NACK bit during the ACK phase of the transfer, during which time the receiver controls the SDA line.

19.3.2. Arbitration

A master may start a transfer only if the bus is free. The bus is free after a STOP condition or after the SCL and SDA lines remain high for a specified time (see Section “19.3.5. SCL High (SMBus Free) Timeout” on page 152). In the event that two or more devices attempt to begin a transfer at the same time, an arbitration scheme is employed to force one master to give up the bus. The master devices continue transmitting until one attempts a HIGH while the other transmits a LOW. Since the bus is open-drain, the bus will be pulled LOW. The master attempting the HIGH will detect a LOW SDA and lose the arbitration. The winning master continues its transmission without interruption; the losing master becomes a slave and receives the rest of the transfer if addressed. This arbitration scheme is non-destructive: one device always wins, and no data is lost.

19.3.3. Clock Low Extension

SMBus provides a clock synchronization mechanism, similar to I2C, which allows devices with different speed capabilities to coexist on the bus. A clock-low extension is used during a transfer in order to allow slower slave devices to communicate with faster masters. The slave may temporarily hold the SCL line LOW to extend the clock low period, effectively decreasing the serial clock frequency.

19.3.4. SCL Low Timeout

If the SCL line is held low by a slave device on the bus, no further communication is possible. Furthermore, the master cannot force the SCL line high to correct the error condition. To solve this problem, the SMBus protocol specifies that devices participating in a transfer must detect any clock cycle held low longer than 25 ms as a “timeout” condition. Devices that have detected the timeout condition must reset the communication no later than 10 ms after detecting the timeout condition.

When the SMBTOE bit in SMB0CF is set, Timer 3 is used to detect SCL low timeouts. Timer 3 is forced to reload when SCL is high, and allowed to count when SCL is low. With Timer 3 enabled and configured to

overflow after 25 ms (and SMBTOE set), the Timer 3 interrupt service routine can be used to reset (disable and re-enable) the SMBus in the event of an SCL low timeout.

19.3.5. SCL High (SMBus Free) Timeout

The SMBus specification stipulates that if the SCL and SDA lines remain high for more that 50 µs, the bus is designated as free. When the SMBFTE bit in SMB0CF is set, the bus will be considered free if SCL and SDA remain high for more than 10 SMBus clock source periods (as defined by the timer configured for the SMBus clock source). If the SMBus is waiting to generate a Master START, the START will be generated following this timeout. A clock source is required for free timeout detection, even in a slave-only implementation.

19.4. Using the SMBus

The SMBus can operate in both Master and Slave modes. The interface provides timing and shifting control for serial transfers; higher level protocol is determined by user software. The SMBus interface provides the following application-independent features:

- Byte-wise serial data transfers
- Clock signal generation on SCL (Master Mode only) and SDA data synchronization
- Timeout/bus error recognition, as defined by the SMB0CF configuration register
- START/STOP timing, detection, and generation
- Bus arbitration
- Interrupt generation
- Status information
- Optional hardware recognition of slave address and automatic acknowledgement of address/data

SMBus interrupts are generated for each data byte or slave address that is transferred. When hardware acknowledgement is disabled, the point at which the interrupt is generated depends on whether the hardware is acting as a data transmitter or receiver. When a transmitter (i.e., sending address/data, receiving an ACK), this interrupt is generated after the ACK cycle so that software may read the received ACK value; when receiving data (i.e., receiving address/data, sending an ACK), this interrupt is generated before the ACK cycle so that software may define the outgoing ACK value. If hardware acknowledgement is enabled, these interrupts are always generated after the ACK cycle. See Section 19.5 for more details on transmission sequences.

Interrupts are also generated to indicate the beginning of a transfer when a master (START generated), or the end of a transfer when a slave (STOP detected). Software should read the SMB0CN (SMBus Control register) to find the cause of the SMBus interrupt. The SMB0CN register is described in Section 19.4.2; Table 19.5 provides a quick SMB0CN decoding reference.

19.4.1. SMBus Configuration Register

The SMBus Configuration register (SMB0CF) is used to enable the SMBus Master and/or Slave modes, select the SMBus clock source, and select the SMBus timing and timeout options. When the ENSMB bit is set, the SMBus is enabled for all master and slave events. Slave events may be disabled by setting the INH bit. With slave events inhibited, the SMBus interface will still monitor the SCL and SDA pins; however, the interface will NACK all received addresses and will not generate any slave interrupts. When the INH bit is set, all slave events will be inhibited following the next START (interrupts will continue for the duration of the current transfer).

Table 19.1. SMBus Clock Source Selection

SMBCS1	SMBCS0	SMBus Clock Source
0	0	Timer 0 Overflow
0	1	Timer 1 Overflow
1	0	Timer 2 High Byte Overflow
1	1	Timer 2 Low Byte Overflow

The SMBCS1–0 bits select the SMBus clock source, which is used only when operating as a master or when the Free Timeout detection is enabled. When operating as a master, overflows from the selected source determine the absolute minimum SCL low and high times as defined in Equation 19.1. Note that the selected clock source may be shared by other peripherals so long as the timer is left running at all times. For example, Timer 1 overflows may generate the SMBus and UART baud rates simultaneously. Timer configuration is covered in Section “23. Timers” on page 202.

$$T_{HighMin} = T_{LowMin} = \frac{1}{f_{ClockSourceOverflow}}$$

Equation 19.1. Minimum SCL High and Low Times

The selected clock source should be configured to establish the minimum SCL High and Low times as per Equation 19.1. When the interface is operating as a master (and SCL is not driven or extended by any other devices on the bus), the typical SMBus bit rate is approximated by Equation 19.2.

$$BitRate = \frac{f_{ClockSourceOverflow}}{3}$$

Equation 19.2. Typical SMBus Bit Rate

Figure 19.4 shows the typical SCL generation described by Equation 19.2. Notice that T_{HIGH} is typically twice as large as T_{LOW}. The actual SCL output may vary due to other devices on the bus (SCL may be extended low by slower slave devices, or driven low by contending master devices). The bit rate when operating as a master will never exceed the limits defined by equation Equation 19.1.

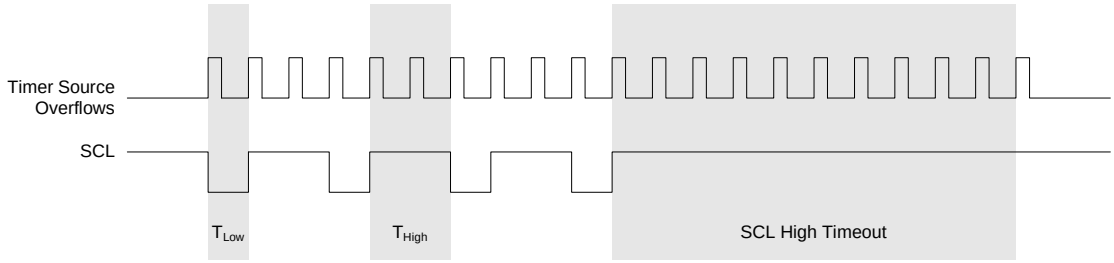

Figure 19.4. Typical SMBus SCL Generation

Setting the EXTHOLD bit extends the minimum setup and hold times for the SDA line. The minimum SDA setup time defines the absolute minimum time that SDA is stable before SCL transitions from low-to-high. The minimum SDA hold time defines the absolute minimum time that the current SDA value remains stable after SCL transitions from high-to-low. EXTHOLD should be set so that the minimum setup and hold times

meet the SMBus Specification requirements of 250 ns and 300 ns, respectively. Table 19.2 shows the minimum setup and hold times for the two EXTHOLD settings. Setup and hold time extensions are typically necessary when SYSCLK is above 10 MHz.

Table 19.2. Minimum SDA Setup and Hold Times

EXTHOLD	Minimum SDA Setup Time	Minimum SDA Hold Time
0	T_{low} – 4 system clocks or 1 system clock + s/w delay*	3 system clocks
1	11 system clocks	12 system clocks
Note: Setup Time for ACK bit transmissions and the MSB of all data transfers. When using software acknowledgement, the s/w delay occurs between the time SMB0DAT or ACK is written and when SI is cleared. Note that if SI is cleared in the same write that defines the outgoing ACK value, s/w delay is zero.		

With the SMBTOE bit set, Timer 3 should be configured to overflow after 25 ms in order to detect SCL low timeouts (see Section “19.3.4. SCL Low Timeout” on page 151). The SMBus interface will force Timer 3 to reload while SCL is high, and allow Timer 3 to count when SCL is low. The Timer 3 interrupt service routine should be used to reset SMBus communication by disabling and re-enabling the SMBus.

SMBus Free Timeout detection can be enabled by setting the SMBFTE bit. When this bit is set, the bus will be considered free if SDA and SCL remain high for more than 10 SMBus clock source periods (see Figure 19.4).

SFR Definition 19.1. SMB0CF: SMBus Clock/Configuration

Bit	7	6	5	4	3	2	1	0
Name	ENSMB	INH	BUSY	EXTHOLD	SMBTOE	SMBFTE	SMBCS[1:0]	
Type	R/W	R/W	R	R/W	R/W	R/W	R/W	
Reset	0	0	0	0	0	0	0	0

SFR Address = 0xC1

Bit	Name	Function
7	ENSMB	**SMBus Enable.** This bit enables the SMBus interface when set to 1. When enabled, the interface constantly monitors the SDA and SCL pins.
6	INH	**SMBus Slave Inhibit.** When this bit is set to logic 1, the SMBus does not generate an interrupt when slave events occur. This effectively removes the SMBus slave from the bus. Master Mode interrupts are not affected.
5	BUSY	**SMBus Busy Indicator.** This bit is set to logic 1 by hardware when a transfer is in progress. It is cleared to logic 0 when a STOP or free-timeout is sensed.
4	EXTHOLD	**SMBus Setup and Hold Time Extension Enable.** This bit controls the SDA setup and hold times according to Table 19.2. 0: SDA Extended Setup and Hold Times disabled. 1: SDA Extended Setup and Hold Times enabled.
3	SMBTOE	**SMBus SCL Timeout Detection Enable.** This bit enables SCL low timeout detection. If set to logic 1, the SMBus forces Timer 3 to reload while SCL is high and allows Timer 3 to count when SCL goes low. If Timer 3 is configured to Split Mode, only the High Byte of the timer is held in reload while SCL is high. Timer 3 should be programmed to generate interrupts at 25 ms, and the Timer 3 interrupt service routine should reset SMBus communication.
2	SMBFTE	**SMBus Free Timeout Detection Enable.** When this bit is set to logic 1, the bus will be considered free if SCL and SDA remain high for more than 10 SMBus clock source periods.
1:0	SMBCS[1:0]	**SMBus Clock Source Selection.** These two bits select the SMBus clock source, which is used to generate the SMBus bit rate. The selected device should be configured according to Equation 19.1. 00: Timer 0 Overflow 01: Timer 1 Overflow 10: Timer 2 High Byte Overflow 11: Timer 2 Low Byte Overflow

19.4.2. SMB0CN Control Register

SMB0CN is used to control the interface and to provide status information (see SFR Definition 19.2). The higher four bits of SMB0CN (MASTER, TXMODE, STA, and STO) form a status vector that can be used to jump to service routines. MASTER indicates whether a device is the master or slave during the current transfer. TXMODE indicates whether the device is transmitting or receiving data for the current byte.

STA and STO indicate that a START and/or STOP has been detected or generated since the last SMBus interrupt. STA and STO are also used to generate START and STOP conditions when operating as a master. Writing a 1 to STA will cause the SMBus interface to enter Master Mode and generate a START when the bus becomes free (STA is not cleared by hardware after the START is generated). Writing a 1 to STO while in Master Mode will cause the interface to generate a STOP and end the current transfer after the next ACK cycle. If STO and STA are both set (while in Master Mode), a STOP followed by a START will be generated.

The ARBLOST bit indicates that the interface has lost an arbitration. This may occur anytime the interface is transmitting (master or slave). A lost arbitration while operating as a slave indicates a bus error condition. ARBLOST is cleared by hardware each time SI is cleared.

The SI bit (SMBus Interrupt Flag) is set at the beginning and end of each transfer, after each byte frame, or when an arbitration is lost; see Table 19.3 for more details.

Important Note About the SI Bit: The SMBus interface is stalled while SI is set; thus SCL is held low, and the bus is stalled until software clears SI.

19.4.2.1. Software ACK Generation

When the EHACK bit in register SMB0ADM is cleared to 0, the firmware on the device must detect incoming slave addresses and ACK or NACK the slave address and incoming data bytes. As a receiver, writing the ACK bit defines the outgoing ACK value; as a transmitter, reading the ACK bit indicates the value received during the last ACK cycle. ACKRQ is set each time a byte is received, indicating that an outgoing ACK value is needed. When ACKRQ is set, software should write the desired outgoing value to the ACK bit before clearing SI. A NACK will be generated if software does not write the ACK bit before clearing SI. SDA will reflect the defined ACK value immediately following a write to the ACK bit; however SCL will remain low until SI is cleared. If a received slave address is not acknowledged, further slave events will be ignored until the next START is detected.

19.4.2.2. Hardware ACK Generation

When the EHACK bit in register SMB0ADM is set to 1, automatic slave address recognition and ACK generation is enabled. More detail about automatic slave address recognition can be found in Section 19.4.3. As a receiver, the value currently specified by the ACK bit will be automatically sent on the bus during the ACK cycle of an incoming data byte. As a transmitter, reading the ACK bit indicates the value received on the last ACK cycle. The ACKRQ bit is not used when hardware ACK generation is enabled. If a received slave address is NACKed by hardware, further slave events will be ignored until the next START is detected, and no interrupt will be generated.

Table 19.3 lists all sources for hardware changes to the SMB0CN bits. Refer to Table 19.5 for SMBus status decoding using the SMB0CN register.

SFR Definition 19.2. SMB0CN: SMBus Control

Bit	7	6	5	4	3	2	1	0
Name	MASTER	TXMODE	STA	STO	ACKRQ	ARBLOST	ACK	SI
Type	R	R	R/W	R/W	R	R	R/W	R/W
Reset	0	0	0	0	0	0	0	0

SFR Address = 0xC0; Bit-Addressable

Bit	Name	Description	Read	Write
7	MASTER	**SMBus Master/Slave Indicator.** This read-only bit indicates when the SMBus is operating as a master.	0: SMBus operating in slave mode. 1: SMBus operating in master mode.	N/A
6	TXMODE	**SMBus Transmit Mode Indicator.** This read-only bit indicates when the SMBus is operating as a transmitter.	0: SMBus in Receiver Mode. 1: SMBus in Transmitter Mode.	N/A
5	STA	**SMBus Start Flag.**	0: No Start or repeated Start detected. 1: Start or repeated Start detected.	0: No Start generated. 1: When Configured as a Master, initiates a START or repeated START.
4	STO	**SMBus Stop Flag.**	0: No Stop condition detected. 1: Stop condition detected (if in Slave Mode) or pending (if in Master Mode).	0: No STOP condition is transmitted. 1: When configured as a Master, causes a STOP condition to be transmitted after the next ACK cycle. Cleared by Hardware.
3	ACKRQ	**SMBus Acknowledge Request.**	0: No Ack requested 1: ACK requested	N/A
2	ARBLOST	**SMBus Arbitration Lost Indicator.**	0: No arbitration error. 1: Arbitration Lost	N/A
1	ACK	**SMBus Acknowledge.**	0: NACK received. 1: ACK received.	0: Send NACK 1: Send ACK
0	SI	**SMBus Interrupt Flag.** This bit is set by hardware under the conditions listed in Table 15.3. SI must be cleared by software. While SI is set, SCL is held low and the SMBus is stalled.	0: No interrupt pending 1: Interrupt Pending	0: Clear interrupt, and initiate next state machine event. 1: Force interrupt.

Table 19.3. Sources for Hardware Changes to SMB0CN

Bit	Set by Hardware When:	Cleared by Hardware When:
MASTER	■ A START is generated.	■ A STOP is generated. ■ Arbitration is lost.
TXMODE	■ START is generated. ■ SMB0DAT is written before the start of an SMBus frame.	■ A START is detected. ■ Arbitration is lost. ■ SMB0DAT is not written before the start of an SMBus frame.
STA	■ A START followed by an address byte is received.	■ Must be cleared by software.
STO	■ A STOP is detected while addressed as a slave. ■ Arbitration is lost due to a detected STOP.	■ A pending STOP is generated.
ACKRQ	■ A byte has been received and an ACK response value is needed (only when hardware ACK is not enabled).	■ After each ACK cycle.
ARBLOST	■ A repeated START is detected as a MASTER when STA is low (unwanted repeated START). ■ SCL is sensed low while attempting to generate a STOP or repeated START condition. ■ SDA is sensed low while transmitting a 1 (excluding ACK bits).	■ Each time SI is cleared.
ACK	■ The incoming ACK value is low (ACKNOWLEDGE).	■ The incoming ACK value is high (NOT ACKNOWLEDGE).
SI	■ A START has been generated. ■ Lost arbitration. ■ A byte has been transmitted and an ACK/NACK received. ■ A byte has been received. ■ A START or repeated START followed by a slave address + R/W has been received. ■ A STOP has been received.	■ Must be cleared by software.

19.4.3. Hardware Slave Address Recognition

The SMBus hardware has the capability to automatically recognize incoming slave addresses and send an ACK without software intervention. Automatic slave address recognition is enabled by setting the EHACK bit in register SMB0ADM to 1. This will enable both automatic slave address recognition and automatic hardware ACK generation for received bytes (as a master or slave). More detail on automatic hardware ACK generation can be found in Section 19.4.2.2.

The registers used to define which address(es) are recognized by the hardware are the SMBus Slave Address register (SFR Definition 19.3) and the SMBus Slave Address Mask register (SFR Definition 19.4). A single address or range of addresses (including the General Call Address 0x00) can be specified using these two registers. The most-significant seven bits of the two registers are used to define which addresses will be ACKed. A 1 in bit positions of the slave address mask SLVM[6:0] enable a comparison between the received slave address and the hardware's slave address SLV[6:0] for those bits. A 0 in a bit of the slave address mask means that bit will be treated as a "don't care" for comparison purposes. In this

case, either a 1 or a 0 value are acceptable on the incoming slave address. Additionally, if the GC bit in register SMB0ADR is set to 1, hardware will recognize the General Call Address (0x00). Table 19.4 shows some example parameter settings and the slave addresses that will be recognized by hardware under those conditions.

Table 19.4. Hardware Address Recognition Examples (EHACK = 1)

Hardware Slave Address SLV[6:0]	Slave Address Mask SLVM[6:0]	GC bit	Slave Addresses Recognized by Hardware
0x34	0x7F	0	0x34
0x34	0x7F	1	0x34, 0x00 (General Call)
0x34	0x7E	0	0x34, 0x35
0x34	0x7E	1	0x34, 0x35, 0x00 (General Call)
0x70	0x73	0	0x70, 0x74, 0x78, 0x7C

SFR Definition 19.3. SMB0ADR: SMBus Slave Address

Bit	7	6	5	4	3	2	1	0
Name	SLV[6:0]							GC
Type	R/W							R/W
Reset	0	0	0	0	0	0	0	0

SFR Address = 0xC7

Bit	Name	Function
7:1	SLV[6:0]	**SMBus Hardware Slave Address.** Defines the SMBus Slave Address(es) for automatic hardware acknowledgement. Only address bits which have a 1 in the corresponding bit position in SLVM[6:0] are checked against the incoming address. This allows multiple addresses to be recognized.
0	GC	**General Call Address Enable.** When hardware address recognition is enabled (EHACK = 1), this bit will determine whether the General Call Address (0x00) is also recognized by hardware. 0: General Call Address is ignored. 1: General Call Address is recognized.

SFR Definition 19.4. SMB0ADM: SMBus Slave Address Mask

Bit	7	6	5	4	3	2	1	0
Name	SLVM[6:0]							EHACK
Type	R/W							R/W
Reset	1	1	1	1	1	1	1	0

SFR Address = 0xCF

Bit	Name	Function
7:1	SLVM[6:0]	**SMBus Slave Address Mask.** Defines which bits of register SMB0ADR are compared with an incoming address byte, and which bits are ignored. Any bit set to 1 in SLVM[6:0] enables comparisons with the corresponding bit in SLV[6:0]. Bits set to 0 are ignored (can be either 0 or 1 in the incoming address).
0	EHACK	**Hardware Acknowledge Enable.** Enables hardware acknowledgement of slave address and received data bytes. 0: Firmware must manually acknowledge all incoming address and data bytes. 1: Automatic Slave Address Recognition and Hardware Acknowledge is Enabled.

19.4.4. Data Register

The SMBus Data register SMB0DAT holds a byte of serial data to be transmitted or one that has just been received. Software may safely read or write to the data register when the SI flag is set. Software should not attempt to access the SMB0DAT register when the SMBus is enabled and the SI flag is cleared to logic 0, as the interface may be in the process of shifting a byte of data into or out of the register.

Data in SMB0DAT is always shifted out MSB first. After a byte has been received, the first bit of received data is located at the MSB of SMB0DAT. While data is being shifted out, data on the bus is simultaneously being shifted in. SMB0DAT always contains the last data byte present on the bus. In the event of lost arbitration, the transition from master transmitter to slave receiver is made with the correct data or address in SMB0DAT.

SFR Definition 19.5. SMB0DAT: SMBus Data

Bit	7	6	5	4	3	2	1	0
Name	SMB0DAT[7:0]							
Type	R/W							
Reset	0	0	0	0	0	0	0	0

SFR Address = 0xC2

Bit	Name	Function
7:0	SMB0DAT[7:0]	**SMBus Data.** The SMB0DAT register contains a byte of data to be transmitted on the SMBus serial interface or a byte that has just been received on the SMBus serial interface. The CPU can read from or write to this register whenever the SI serial interrupt flag (SMB0CN.0) is set to logic 1. The serial data in the register remains stable as long as the SI flag is set. When the SI flag is not set, the system may be in the process of shifting data in/out and the CPU should not attempt to access this register.

19.5. SMBus Transfer Modes

The SMBus interface may be configured to operate as master and/or slave. At any particular time, it will be operating in one of the following four modes: Master Transmitter, Master Receiver, Slave Transmitter, or Slave Receiver. The SMBus interface enters Master Mode any time a START is generated, and remains in Master Mode until it loses an arbitration or generates a STOP. An SMBus interrupt is generated at the end of all SMBus byte frames. Note that the position of the ACK interrupt when operating as a receiver depends on whether hardware ACK generation is enabled. As a receiver, the interrupt for an ACK occurs **before** the ACK with hardware ACK generation disabled, and **after** the ACK when hardware ACK generation is enabled. As a transmitter, interrupts occur **after** the ACK, regardless of whether hardware ACK generation is enabled or not.

19.5.1. Write Sequence (Master)

During a write sequence, an SMBus master writes data to a slave device. The master in this transfer will be a transmitter during the address byte, and a transmitter during all data bytes. The SMBus interface generates the START condition and transmits the first byte containing the address of the target slave and the data direction bit. In this case the data direction bit (R/W) will be logic 0 (WRITE). The master then transmits one or more bytes of serial data. After each byte is transmitted, an acknowledge bit is generated by the slave. The transfer is ended when the STO bit is set and a STOP is generated. Note that the interface will switch to Master Receiver Mode if SMB0DAT is not written following a Master Transmitter interrupt. Figure 19.5 shows a typical master write sequence. Two transmit data bytes are shown, though any number of bytes may be transmitted. Notice that all of the “data byte transferred” interrupts occur **after** the ACK cycle in this mode, regardless of whether hardware ACK generation is enabled.

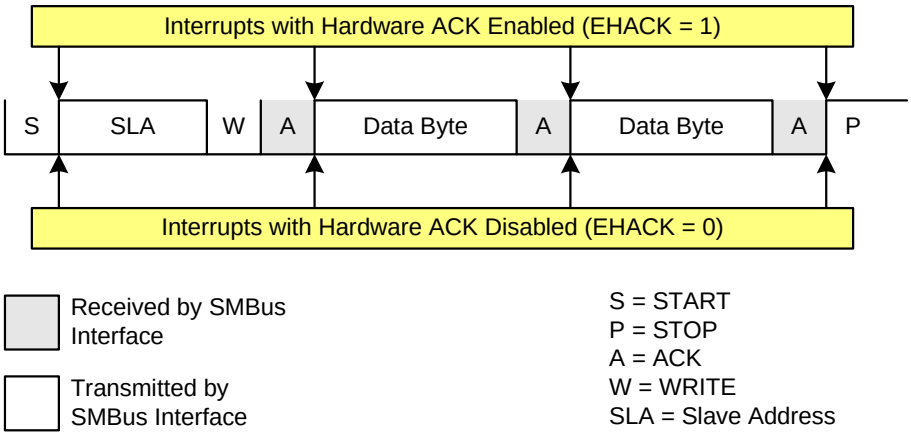

Figure 19.5. Typical Master Write Sequence

19.5.2. Read Sequence (Master)

During a read sequence, an SMBus master reads data from a slave device. The master in this transfer will be a transmitter during the address byte, and a receiver during all data bytes. The SMBus interface generates the START condition and transmits the first byte containing the address of the target slave and the data direction bit. In this case the data direction bit (R/W) will be logic 1 (READ). Serial data is then received from the slave on SDA while the SMBus outputs the serial clock. The slave transmits one or more bytes of serial data.

If hardware ACK generation is disabled, the ACKRQ is set to 1 and an interrupt is generated after each received byte. Software must write the ACK bit at that time to ACK or NACK the received byte.

With hardware ACK generation enabled, the SMBus hardware will automatically generate the ACK/NACK, and then post the interrupt. **It is important to note that the appropriate ACK or NACK value should be set up by the software prior to receiving the byte when hardware ACK generation is enabled.**

Writing a 1 to the ACK bit generates an ACK; writing a 0 generates a NACK. Software should write a 0 to the ACK bit for the last data transfer, to transmit a NACK. The interface exits Master Receiver Mode after the STO bit is set and a STOP is generated. The interface will switch to Master Transmitter Mode if SMB0DAT is written while an active Master Receiver. Figure 19.6 shows a typical master read sequence. Two received data bytes are shown, though any number of bytes may be received. Notice that the ‘data byte transferred’ interrupts occur at different places in the sequence, depending on whether hardware ACK generation is enabled. The interrupt occurs **before** the ACK with hardware ACK generation disabled, and **after** the ACK when hardware ACK generation is enabled.

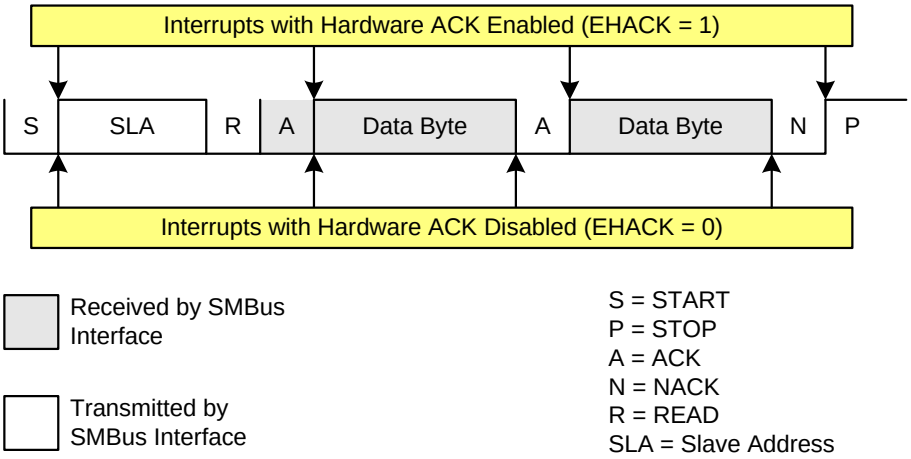

Figure 19.6. Typical Master Read Sequence

19.5.3. Write Sequence (Slave)

During a write sequence, an SMBus master writes data to a slave device. The slave in this transfer will be a receiver during the address byte, and a receiver during all data bytes. When slave events are enabled (INH = 0), the interface enters Slave Receiver Mode when a START followed by a slave address and direction bit (WRITE in this case) is received. If hardware ACK generation is disabled, upon entering Slave Receiver Mode, an interrupt is generated and the ACKRQ bit is set. The software must respond to the received slave address with an ACK, or ignore the received slave address with a NACK. If hardware ACK generation is enabled, the hardware will apply the ACK for a slave address which matches the criteria set up by SMB0ADR and SMB0ADM. The interrupt will occur after the ACK cycle.

If the received slave address is ignored (by software or hardware), slave interrupts will be inhibited until the next START is detected. If the received slave address is acknowledged, zero or more data bytes are received.

If hardware ACK generation is disabled, the ACKRQ is set to 1 and an interrupt is generated after each received byte. Software must write the ACK bit at that time to ACK or NACK the received byte.

With hardware ACK generation enabled, the SMBus hardware will automatically generate the ACK/NACK, and then post the interrupt. **It is important to note that the appropriate ACK or NACK value should be set up by the software prior to receiving the byte when hardware ACK generation is enabled.**

The interface exits Slave Receiver Mode after receiving a STOP. Note that the interface will switch to Slave Transmitter Mode if SMB0DAT is written while an active Slave Receiver. Figure 19.7 shows a typical slave write sequence. Two received data bytes are shown, though any number of bytes may be received. Notice that the ‘data byte transferred’ interrupts occur at different places in the sequence, depending on whether hardware ACK generation is enabled. The interrupt occurs **before** the ACK with hardware ACK generation disabled, and **after** the ACK when hardware ACK generation is enabled.

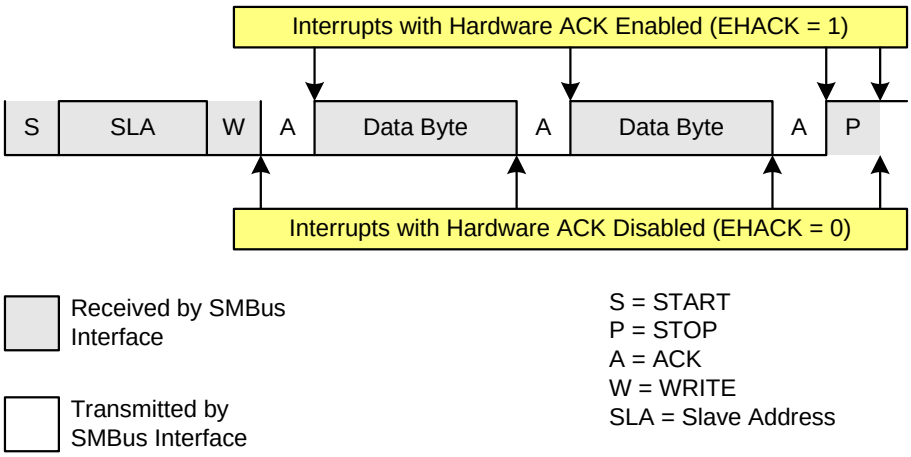

Figure 19.7. Typical Slave Write Sequence

19.5.4. Read Sequence (Slave)

During a read sequence, an SMBus master reads data from a slave device. The slave in this transfer will be a receiver during the address byte, and a transmitter during all data bytes. When slave events are enabled (INH = 0), the interface enters Slave Receiver Mode (to receive the slave address) when a START followed by a slave address and direction bit (READ in this case) is received. If hardware ACK generation is disabled, upon entering Slave Receiver Mode, an interrupt is generated and the ACKRQ bit is set. The software must respond to the received slave address with an ACK, or ignore the received slave address with a NACK. If hardware ACK generation is enabled, the hardware will apply the ACK for a slave address which matches the criteria set up by SMB0ADR and SMB0ADM. The interrupt will occur after the ACK cycle.

If the received slave address is ignored (by software or hardware), slave interrupts will be inhibited until the next START is detected. If the received slave address is acknowledged, zero or more data bytes are transmitted. If the received slave address is acknowledged, data should be written to SMB0DAT to be transmitted. The interface enters slave transmitter mode, and transmits one or more bytes of data. After each byte is transmitted, the master sends an acknowledge bit; if the acknowledge bit is an ACK, SMB0DAT should be written with the next data byte. If the acknowledge bit is a NACK, SMB0DAT should not be written to before SI is cleared (an error condition may be generated if SMB0DAT is written following a received NACK while in slave transmitter mode). The interface exits slave transmitter mode after receiving a STOP. Note that the interface will switch to slave receiver mode if SMB0DAT is not written following a Slave Transmitter interrupt. Figure 19.8 shows a typical slave read sequence. Two transmitted data bytes are shown, though any number of bytes may be transmitted. Notice that all of the “data byte transferred” interrupts occur **after** the ACK cycle in this mode, regardless of whether hardware ACK generation is enabled.

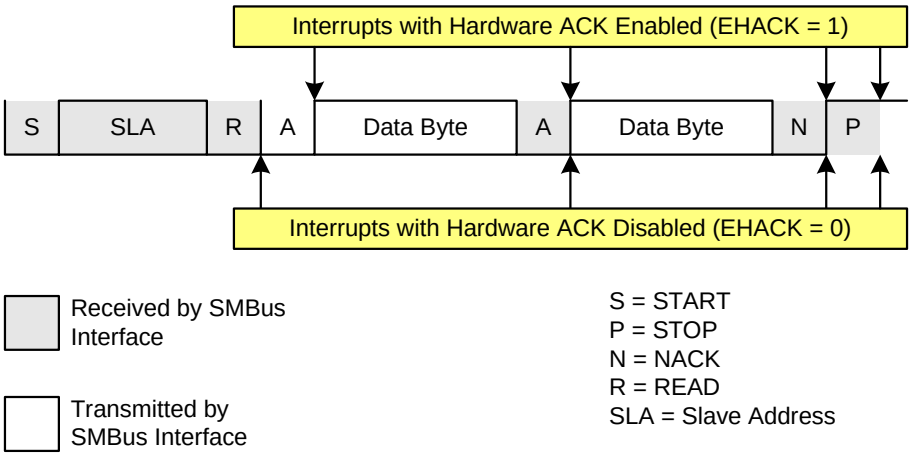

Figure 19.8. Typical Slave Read Sequence

19.6. SMBus Status Decoding

The current SMBus status can be easily decoded using the SMB0CN register. The appropriate actions to take in response to an SMBus event depend on whether hardware slave address recognition and ACK generation is enabled or disabled. Table 19.5 describes the typical actions when hardware slave address recognition and ACK generation is disabled. Table 19.6 describes the typical actions when hardware slave address recognition and ACK generation is enabled. In the tables, STATUS VECTOR refers to the four upper bits of SMB0CN: MASTER, TXMODE, STA, and STO. The shown response options are only the typical responses; application-specific procedures are allowed as long as they conform to the SMBus specification. Highlighted responses are allowed by hardware but do not conform to the SMBus specification.

Table 19.5. SMBus Status Decoding With Hardware ACK Generation Disabled (EHACK = 0)

Mode	Values Read				Current SMbus State	Typical Response Options	Values to Write			Next Status Vector Expected
	Status Vector	ACKRQ	ARBLOST	ACK			STA	STO	ACK	
Master Transmitter	1110	0	0	X	A master START was generated.	Load slave address + R/W into SMB0DAT.	0	0	X	1100
	1100	0	0	0	A master data or address byte was transmitted; NACK received.	Set STA to restart transfer.	1	0	X	1110
						Abort transfer.	0	1	X	—
		0	0	1	A master data or address byte was transmitted; ACK received.	Load next data byte into SMB0DAT.	0	0	X	1100
						End transfer with STOP.	0	1	X	—
						End transfer with STOP and start another transfer.	1	1	X	—
						Send repeated START.	1	0	X	1110
						Switch to Master Receiver Mode (clear SI without writing new data to SMB0DAT).	0	0	X	1000
Master Receiver	1000	1	0	X	A master data byte was received; ACK requested.	Acknowledge received byte; Read SMB0DAT.	0	0	1	1000
						Send NACK to indicate last byte, and send STOP.	0	1	0	—
						Send NACK to indicate last byte, and send STOP followed by START.	1	1	0	1110
						Send ACK followed by repeated START.	1	0	1	1110
						Send NACK to indicate last byte, and send repeated START.	1	0	0	1110
						Send ACK and switch to Master Transmitter Mode (write to SMB0DAT before clearing SI).	0	0	1	1100
						Send NACK and switch to Master Transmitter Mode (write to SMB0DAT before clearing SI).	0	0	0	1100

Table 19.5. SMBus Status Decoding With Hardware ACK Generation Disabled (EHACK = 0) (Continued)

Mode	Values Read				Current SMbus State	Typical Response Options	Values to Write			Next Status Vector Expected
	Status Vector	ACKRQ	ARBLOST	ACK			STA	STO	ACK	
Slave Transmitter	0100	0	0	0	A slave byte was transmitted; NACK received.	No action required (expecting STOP condition).	0	0	X	0001
		0	0	1	A slave byte was transmitted; ACK received.	Load SMB0DAT with next data byte to transmit.	0	0	X	0100
		0	1	X	A Slave byte was transmitted; error detected.	No action required (expecting Master to end transfer).	0	0	X	0001
	0101	0	X	X	An illegal STOP or bus error was detected while a Slave Transmission was in progress.	Clear STO.	0	0	X	—
Slave Receiver	0010	1	0	X	A slave address + R/W was received; ACK requested.	If Write, Acknowledge received address	0	0	1	0000
						If Read, Load SMB0DAT with data byte; ACK received address	0	0	1	0100
						NACK received address.	0	0	0	—
		1	1	X	Lost arbitration as master; slave address + R/W received; ACK requested.	If Write, Acknowledge received address	0	0	1	0000
						If Read, Load SMB0DAT with data byte; ACK received address	0	0	1	0100
						NACK received address.	0	0	0	—
						Reschedule failed transfer; NACK received address.	1	0	0	1110
	0001	0	0	X	A STOP was detected while addressed as a Slave Transmitter or Slave Receiver.	Clear STO.	0	0	X	—
		1	1	X	Lost arbitration while attempting a STOP.	No action required (transfer complete/aborted).	0	0	0	—
	0000	1	0	X	A slave byte was received; ACK requested.	Acknowledge received byte; Read SMB0DAT.	0	0	1	0000
						NACK received byte.	0	0	0	—

Table 19.5. SMBus Status Decoding With Hardware ACK Generation Disabled (EHACK = 0) (Continued)

Mode	Values Read				Current SMbus State	Typical Response Options	Values to Write			Next Status Vector Expected
	Status Vector	ACKRQ	ARBLOST	ACK			STA	STO	ACK	
Bus Error Condition	0010	0	1	X	Lost arbitration while attempting a repeated START.	Abort failed transfer.	0	0	X	—
						Reschedule failed transfer.	1	0	X	1110
	0001	0	1	X	Lost arbitration due to a detected STOP.	Abort failed transfer.	0	0	X	—
						Reschedule failed transfer.	1	0	X	1110
	0000	1	1	X	Lost arbitration while transmitting a data byte as master.	Abort failed transfer.	0	0	0	—
						Reschedule failed transfer.	1	0	0	1110

Table 19.6. SMBus Status Decoding With Hardware ACK Generation Enabled (EHACK = 1)

Mode	Values Read				Current SMbus State	Typical Response Options	Values to Write			Next Status Vector Expected
	Status Vector	ACKRQ	ARBLOST	ACK			STA	STO	ACK	
Master Transmitter	1110	0	0	X	A master START was generated.	Load slave address + R/W into SMB0DAT.	0	0	X	1100
	1100	0	0	0	A master data or address byte was transmitted; NACK received.	Set STA to restart transfer.	1	0	X	1110
						Abort transfer.	0	1	X	—
		0	0	1	A master data or address byte was transmitted; ACK received.	Load next data byte into SMB0DAT.	0	0	X	1100
						End transfer with STOP.	0	1	X	—
						End transfer with STOP and start another transfer.	1	1	X	—
						Send repeated START.	1	0	X	1110
						Switch to Master Receiver Mode (clear SI without writing new data to SMB0DAT). Set ACK for initial data byte.	0	0	1	1000

Table 19.6. SMBus Status Decoding With Hardware ACK Generation Enabled (EHACK = 1) (Continued)

Mode	Values Read				Current SMbus State	Typical Response Options	Values to Write			Next Status Vector Expected
	Status Vector	ACKRQ	ARBLOST	ACK			STA	STO	ACK	
Master Receiver	1000	0	0	1	A master data byte was received; ACK sent.	Set ACK for next data byte; Read SMB0DAT.	0	0	1	1000
						Set NACK to indicate next data byte as the last data byte; Read SMB0DAT.	0	0	0	1000
						Initiate repeated START.	1	0	0	1110
						Switch to Master Transmitter Mode (write to SMB0DAT before clearing SI).	0	0	X	1100
		0	0	0	A master data byte was received; NACK sent (last byte).	Read SMB0DAT; send STOP.	0	1	0	—
						Read SMB0DAT; Send STOP followed by START.	1	1	0	1110
						Initiate repeated START.	1	0	0	1110
						Switch to Master Transmitter Mode (write to SMB0DAT before clearing SI).	0	0	X	1100
Slave Transmitter	0100	0	0	0	A slave byte was transmitted; NACK received.	No action required (expecting STOP condition).	0	0	X	0001
		0	0	1	A slave byte was transmitted; ACK received.	Load SMB0DAT with next data byte to transmit.	0	0	X	0100
		0	1	X	A Slave byte was transmitted; error detected.	No action required (expecting Master to end transfer).	0	0	X	0001
	0101	0	X	X	An illegal STOP or bus error was detected while a Slave Transmission was in progress.	Clear STO.	0	0	X	—

Table 19.6. SMBus Status Decoding With Hardware ACK Generation Enabled (EHACK = 1) (Continued)

Mode	Values Read				Current SMbus State	Typical Response Options	Values to Write			Next Status Vector Expected
	Status Vector	ACKRQ	ARBLOST	ACK			STA	STO	ACK	
Slave Receiver	0010	0	0	X	A slave address + R/W was received; ACK sent.	If Write, Set ACK for first data byte.	0	0	1	0000
						If Read, Load SMB0DAT with data byte	0	0	X	0100
		0	1	X	Lost arbitration as master; slave address + R/W received; ACK sent.	If Write, Set ACK for first data byte.	0	0	1	0000
						If Read, Load SMB0DAT with data byte	0	0	X	0100
						Reschedule failed transfer	1	0	X	1110
	0001	0	0	X	A STOP was detected while addressed as a Slave Transmitter or Slave Receiver.	Clear STO.	0	0	X	—
		0	1	X	Lost arbitration while attempting a STOP.	No action required (transfer complete/aborted).	0	0	0	—
	0000	0	0	X	A slave byte was received.	Set ACK for next data byte; Read SMB0DAT.	0	0	1	0000
						Set NACK for next data byte; Read SMB0DAT.	0	0	0	0000
Bus Error Condition	0010	0	1	X	Lost arbitration while attempting a repeated START.	Abort failed transfer.	0	0	X	—
						Reschedule failed transfer.	1	0	X	1110
	0001	0	1	X	Lost arbitration due to a detected STOP.	Abort failed transfer.	0	0	X	—
						Reschedule failed transfer.	1	0	X	1110
	0000	0	1	X	Lost arbitration while transmitting a data byte as master.	Abort failed transfer.	0	0	X	—
						Reschedule failed transfer.	1	0	X	1110

20. UART0

UART0 is an asynchronous, full duplex serial port offering modes 1 and 3 of the standard 8051 UART. Enhanced baud rate support allows a wide range of clock sources to generate standard baud rates (details in Section “20.1. Enhanced Baud Rate Generation” on page 172). Received data buffering allows UART0 to start reception of a second incoming data byte before software has finished reading the previous data byte.

UART0 has two associated SFRs: Serial Control Register 0 (SCON0) and Serial Data Buffer 0 (SBUF0). The single SBUF0 location provides access to both transmit and receive registers. **Writes to SBUF0 always access the Transmit register. Reads of SBUF0 always access the buffered Receive register; it is not possible to read data from the Transmit register.**

With UART0 interrupts enabled, an interrupt is generated each time a transmit is completed (TI0 is set in SCON0), or a data byte has been received (RI0 is set in SCON0). The UART0 interrupt flags are not cleared by hardware when the CPU vectors to the interrupt service routine. They must be cleared manually by software, allowing software to determine the cause of the UART0 interrupt (transmit complete or receive complete).

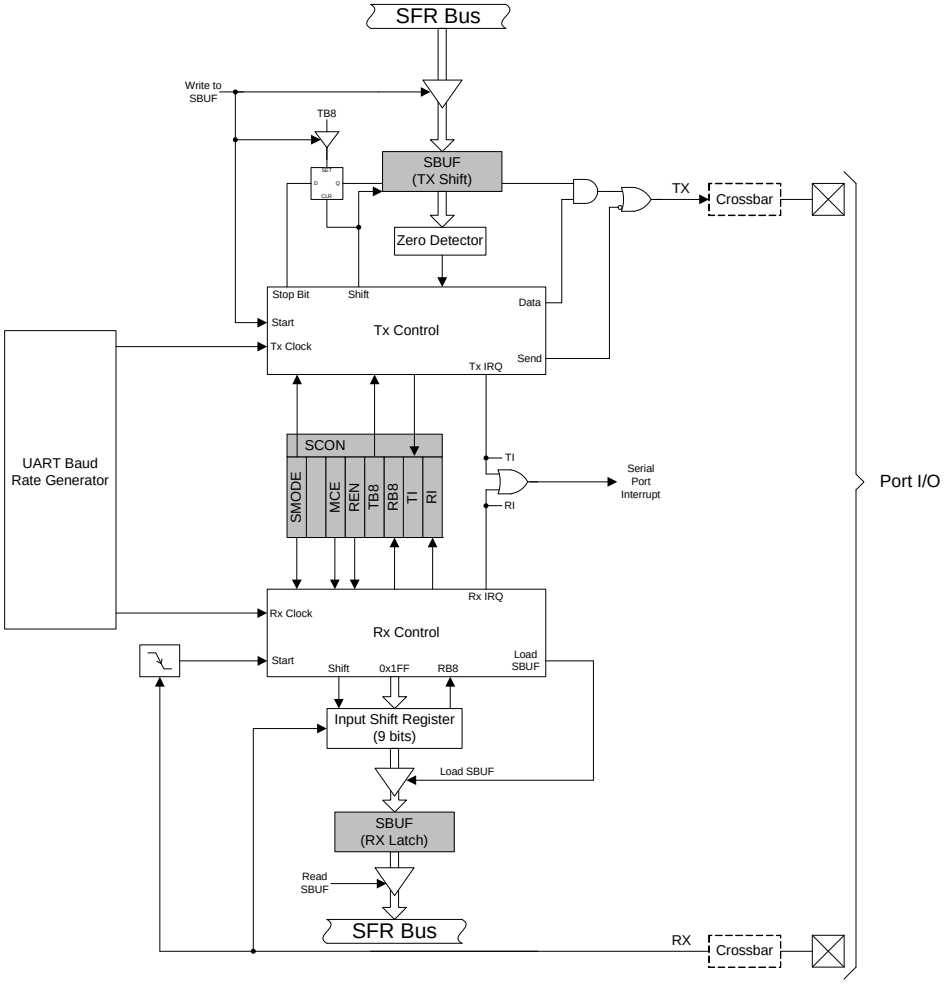

Figure 20.1. UART0 Block Diagram

20.1. Enhanced Baud Rate Generation

The UART0 baud rate is generated by Timer 1 in 8-bit auto-reload mode. The TX clock is generated by TL1; the RX clock is generated by a copy of TL1 (shown as RX Timer in Figure 20.2), which is not user-accessible. Both TX and RX Timer overflows are divided by two to generate the TX and RX baud rates. The RX Timer runs when Timer 1 is enabled, and uses the same reload value (TH1). However, an RX Timer reload is forced when a START condition is detected on the RX pin. This allows a receive to begin any time a START is detected, independent of the TX Timer state.

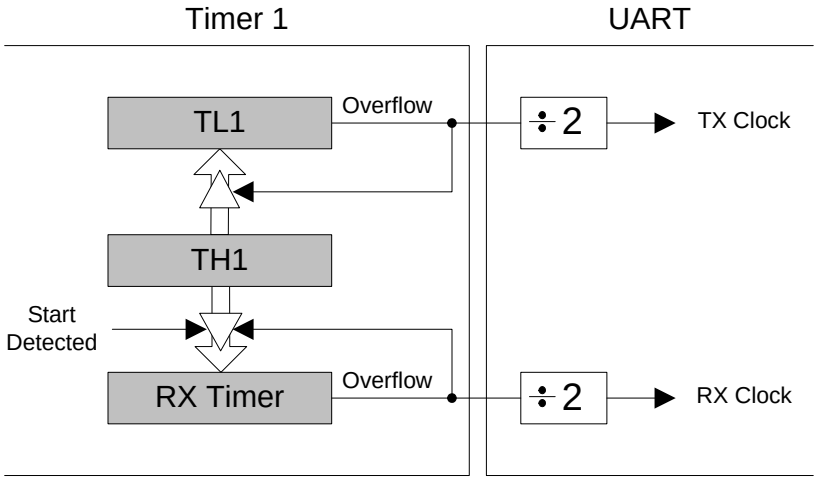

Figure 20.2. UART0 Baud Rate Logic

Timer 1 should be configured for Mode 2, 8-bit auto-reload (see Section “23.1.3. Mode 2: 8-bit Counter/Timer with Auto-Reload” on page 205). The Timer 1 reload value should be set so that overflows will occur at two times the desired UART baud rate frequency. Note that Timer 1 may be clocked by one of six sources: SYSCLK, SYSCLK/4, SYSCLK/12, SYSCLK/48, the external oscillator clock/8, or an external input T1. For any given Timer 1 clock source, the UART0 baud rate is determined by Equation 20.1-A and Equation 20.1-B.

A) $$\text{UARTBaudRate} = \frac{1}{2} \times \text{T1_Overflow_Rate}$$

B) $$\text{T1_Overflow_Rate} = \frac{\text{T1}_{\text{CLK}}}{256 - \text{TH1}}$$

Equation 20.1. UART0 Baud Rate

Where $T1_{CLK}$ is the frequency of the clock supplied to Timer 1, and *T1H* is the high byte of Timer 1 (reload value). Timer 1 clock frequency is selected as described in Section “23. Timers” on page 202. A quick reference for typical baud rates and system clock frequencies is given in Table 20.1 through Table 20.2. The internal oscillator may still generate the system clock when the external oscillator is driving Timer 1.

20.2. Operational Modes

UART0 provides standard asynchronous, full duplex communication. The UART mode (8-bit or 9-bit) is selected by the S0MODE bit (SCON0.7). Typical UART connection options are shown in Figure 20.3.

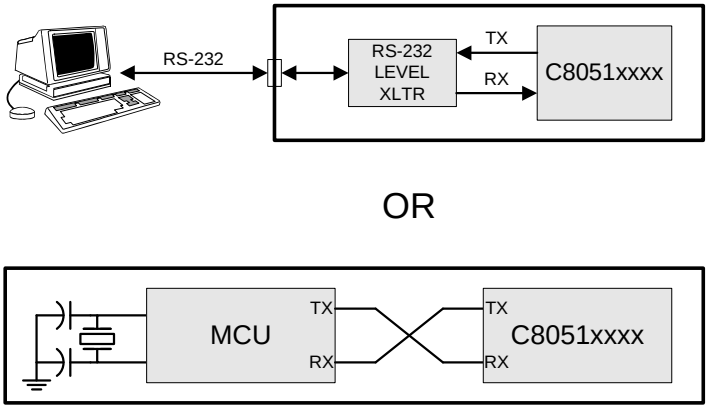

Figure 20.3. UART Interconnect Diagram

20.2.1. 8-Bit UART

8-Bit UART mode uses a total of 10 bits per data byte: one start bit, eight data bits (LSB first), and one stop bit. Data are transmitted LSB first from the TX0 pin and received at the RX0 pin. On receive, the eight data bits are stored in SBUF0 and the stop bit goes into RB80 (SCON0.2).

Data transmission begins when software writes a data byte to the SBUF0 register. The TI0 Transmit Interrupt Flag (SCON0.1) is set at the end of the transmission (the beginning of the stop-bit time). Data reception can begin any time after the REN0 Receive Enable bit (SCON0.4) is set to logic 1. After the stop bit is received, the data byte will be loaded into the SBUF0 receive register if the following conditions are met: RI0 must be logic 0, and if MCE0 is logic 1, the stop bit must be logic 1. In the event of a receive data overrun, the first received 8 bits are latched into the SBUF0 receive register and the following overrun data bits are lost.

If these conditions are met, the eight bits of data is stored in SBUF0, the stop bit is stored in RB80 and the RI0 flag is set. If these conditions are not met, SBUF0 and RB80 will not be loaded and the RI0 flag will not be set. An interrupt will occur if enabled when either TI0 or RI0 is set.

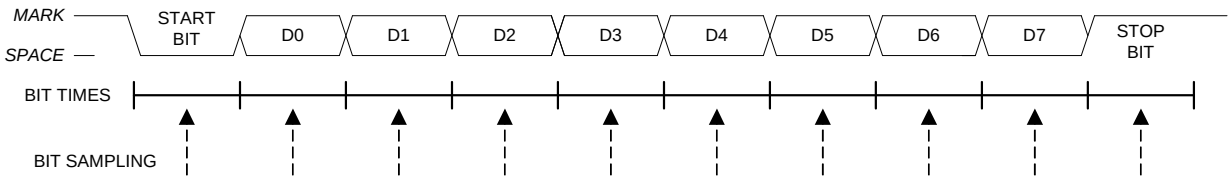

Figure 20.4. 8-Bit UART Timing Diagram

20.2.2. 9-Bit UART

9-bit UART mode uses a total of eleven bits per data byte: a start bit, 8 data bits (LSB first), a programmable ninth data bit, and a stop bit. The state of the ninth transmit data bit is determined by the value in TB80 (SCON0.3), which is assigned by user software. It can be assigned the value of the parity flag (bit P in register PSW) for error detection, or used in multiprocessor communications. On receive, the ninth data bit goes into RB80 (SCON0.2) and the stop bit is ignored.

Data transmission begins when an instruction writes a data byte to the SBUF0 register. The TI0 Transmit Interrupt Flag (SCON0.1) is set at the end of the transmission (the beginning of the stop-bit time). Data reception can begin any time after the REN0 Receive Enable bit (SCON0.4) is set to 1. After the stop bit is received, the data byte will be loaded into the SBUF0 receive register if the following conditions are met: (1) RI0 must be logic 0, and (2) if MCE0 is logic 1, the 9th bit must be logic 1 (when MCE0 is logic 0, the state of the ninth data bit is unimportant). If these conditions are met, the eight bits of data are stored in SBUF0, the ninth bit is stored in RB80, and the RI0 flag is set to 1. If the above conditions are not met, SBUF0 and RB80 will not be loaded and the RI0 flag will not be set to 1. A UART0 interrupt will occur if enabled when either TI0 or RI0 is set to 1.

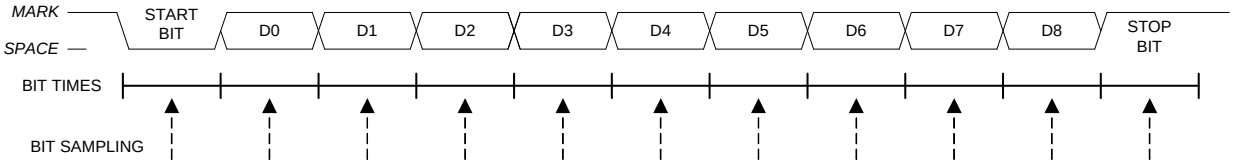

Figure 20.5. 9-Bit UART Timing Diagram

20.3. Multiprocessor Communications

9-Bit UART mode supports multiprocessor communication between a master processor and one or more slave processors by special use of the ninth data bit. When a master processor wants to transmit to one or more slaves, it first sends an address byte to select the target(s). An address byte differs from a data byte in that its ninth bit is logic 1; in a data byte, the ninth bit is always set to logic 0.

Setting the MCE0 bit (SCON0.5) of a slave processor configures its UART such that when a stop bit is received, the UART will generate an interrupt only if the ninth bit is logic 1 (RB80 = 1) signifying an address byte has been received. In the UART interrupt handler, software will compare the received address with the slave's own assigned 8-bit address. If the addresses match, the slave will clear its MCE0 bit to enable interrupts on the reception of the following data byte(s). Slaves that weren't addressed leave their MCE0 bits set and do not generate interrupts on the reception of the following data bytes, thereby ignoring the data. Once the entire message is received, the addressed slave resets its MCE0 bit to ignore all transmissions until it receives the next address byte.

Multiple addresses can be assigned to a single slave and/or a single address can be assigned to multiple slaves, thereby enabling "broadcast" transmissions to more than one slave simultaneously. The master processor can be configured to receive all transmissions or a protocol can be implemented such that the master/slave role is temporarily reversed to enable half-duplex transmission between the original master and slave(s).

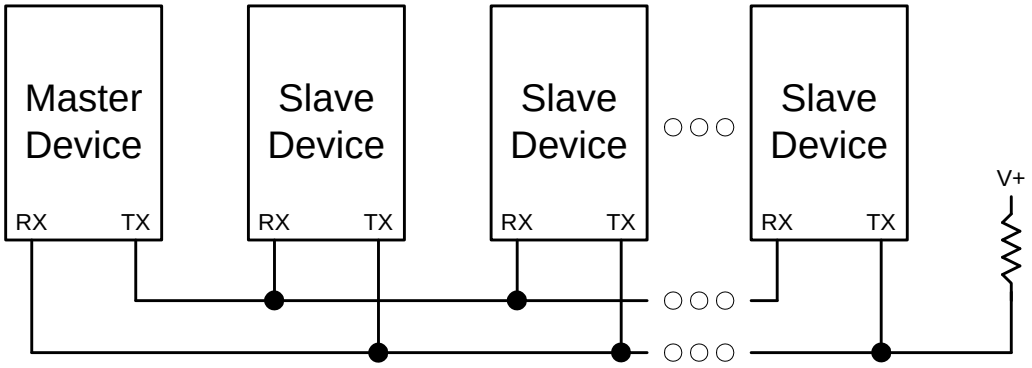

Figure 20.6. UART Multi-Processor Mode Interconnect Diagram

SFR Definition 20.1. SCON0: Serial Port 0 Control

Bit	7	6	5	4	3	2	1	0
Name	S0MODE		MCE0	REN0	TB80	RB80	TI0	RI0
Type	R/W	R	R/W	R/W	R/W	R/W	R/W	R/W
Reset	0	1	0	0	0	0	0	0

SFR Address = 0x98; Bit-Addressable

Bit	Name	Function
7	S0MODE	**Serial Port 0 Operation Mode.** Selects the UART0 Operation Mode. 0: 8-bit UART with Variable Baud Rate. 1: 9-bit UART with Variable Baud Rate.
6	Unused	**Unused**. Read = 1b, Write = Don't Care.
5	MCE0	**Multiprocessor Communication Enable.** The function of this bit is dependent on the Serial Port 0 Operation Mode: **Mode 0: Checks for valid stop bit.** 0: Logic level of stop bit is ignored. 1: RI0 will only be activated if stop bit is logic level 1. **Mode 1: Multiprocessor Communications Enable.** 0: Logic level of ninth bit is ignored. 1: RI0 is set and an interrupt is generated only when the ninth bit is logic 1.
4	REN0	**Receive Enable.** 0: UART0 reception disabled. 1: UART0 reception enabled.
3	TB80	**Ninth Transmission Bit.** The logic level of this bit will be sent as the ninth transmission bit in 9-bit UART Mode (Mode 1). Unused in 8-bit mode (Mode 0).
2	RB80	**Ninth Receive Bit.** RB80 is assigned the value of the STOP bit in Mode 0; it is assigned the value of the 9th data bit in Mode 1.
1	TI0	**Transmit Interrupt Flag.** Set by hardware when a byte of data has been transmitted by UART0 (after the 8th bit in 8-bit UART Mode, or at the beginning of the STOP bit in 9-bit UART Mode). When the UART0 interrupt is enabled, setting this bit causes the CPU to vector to the UART0 interrupt service routine. This bit must be cleared manually by software.
0	RI0	**Receive Interrupt Flag.** Set to 1 by hardware when a byte of data has been received by UART0 (set at the STOP bit sampling time). When the UART0 interrupt is enabled, setting this bit to 1 causes the CPU to vector to the UART0 interrupt service routine. This bit must be cleared manually by software.

SFR Definition 20.2. SBUF0: Serial (UART0) Port Data Buffer

Bit	7	6	5	4	3	2	1	0
Name	SBUF0[7:0]							
Type	R/W							
Reset	0	0	0	0	0	0	0	0

SFR Address = 0x99

Bit	Name	Function
7:0	SBUF0[7:0]	**Serial Data Buffer Bits 7–0 (MSB–LSB).** This SFR accesses two registers; a transmit shift register and a receive latch register. When data is written to SBUF0, it goes to the transmit shift register and is held for serial transmission. Writing a byte to SBUF0 initiates the transmission. A read of SBUF0 returns the contents of the receive latch.

Table 20.1. Timer Settings for Standard Baud Rates Using The Internal 24.5 MHz Oscillator

	Frequency: 24.5 MHz						
	Target Baud Rate (bps)	Baud Rate % Error	Oscillator Divide Factor	Timer Clock Source	SCA1–SCA0 (pre-scale select)[1]	T1M[1]	Timer 1 Reload Value (hex)
SYSCLK from Internal Osc.	230400	–0.32%	106	SYSCLK	XX[2]	1	0xCB
	115200	–0.32%	212	SYSCLK	XX	1	0x96
	57600	0.15%	426	SYSCLK	XX	1	0x2B
	28800	–0.32%	848	SYSCLK/4	01	0	0x96
	14400	0.15%	1704	SYSCLK/12	00	0	0xB9
	9600	–0.32%	2544	SYSCLK/12	00	0	0x96
	2400	–0.32%	10176	SYSCLK/48	10	0	0x96
	1200	0.15%	20448	SYSCLK/48	10	0	0x2B

Notes:
1. SCA1–SCA0 and T1M bit definitions can be found in Section 23.1.
2. X = Don't care.

Table 20.2. Timer Settings for Standard Baud Rates Using an External 22.1184 MHz Oscillator

	Frequency: 22.1184 MHz						
	Target Baud Rate (bps)	Baud Rate % Error	Oscillator Divide Factor	Timer Clock Source	SCA1–SCA0 (pre-scale select)[1]	T1M[1]	Timer 1 Reload Value (hex)
SYSCLK from External Osc.	230400	0.00%	96	SYSCLK	XX[2]	1	0xD0
	115200	0.00%	192	SYSCLK	XX	1	0xA0
	57600	0.00%	384	SYSCLK	XX	1	0x40
	28800	0.00%	768	SYSCLK / 12	00	0	0xE0
	14400	0.00%	1536	SYSCLK / 12	00	0	0xC0
	9600	0.00%	2304	SYSCLK / 12	00	0	0xA0
	2400	0.00%	9216	SYSCLK / 48	10	0	0xA0
	1200	0.00%	18432	SYSCLK / 48	10	0	0x40
SYSCLK from Internal Osc.	230400	0.00%	96	EXTCLK / 8	11	0	0xFA
	115200	0.00%	192	EXTCLK / 8	11	0	0xF4
	57600	0.00%	384	EXTCLK / 8	11	0	0xE8
	28800	0.00%	768	EXTCLK / 8	11	0	0xD0
	14400	0.00%	1536	EXTCLK / 8	11	0	0xA0
	9600	0.00%	2304	EXTCLK / 8	11	0	0x70

Notes:
1. SCA1–SCA0 and T1M bit definitions can be found in Section 23.1.
2. X = Don't care.

21. UART1

UART1 is an asynchronous, full duplex serial port offering a variety of data formatting options. A dedicated baud rate generator with a 16-bit timer and selectable prescaler is included, which can generate a wide range of baud rates (details in Section “21.1. Baud Rate Generator” on page 179). A received data FIFO allows UART1 to receive up to three data bytes before data is lost and an overflow occurs.

UART1 has six associated SFRs. Three are used for the Baud Rate Generator (SBCON1, SBRLH1, and SBRLL1), two are used for data formatting, control, and status functions (SCON1, SMOD1), and one is used to send and receive data (SBUF1). The single SBUF1 location provides access to both the transmit holding register and the receive FIFO. **Writes to SBUF1 always access the Transmit Holding Register. Reads of SBUF1 always access the first byte of the Receive FIFO; it is not possible to read data from the Transmit Holding Register.**

With UART1 interrupts enabled, an interrupt is generated each time a transmit is completed (TI1 is set in SCON1), or a data byte has been received (RI1 is set in SCON1). The UART1 interrupt flags are not cleared by hardware when the CPU vectors to the interrupt service routine. They must be cleared manually by software, allowing software to determine the cause of the UART1 interrupt (transmit complete or receive complete). Note that if additional bytes are available in the Receive FIFO, the RI1 bit cannot be cleared by software.

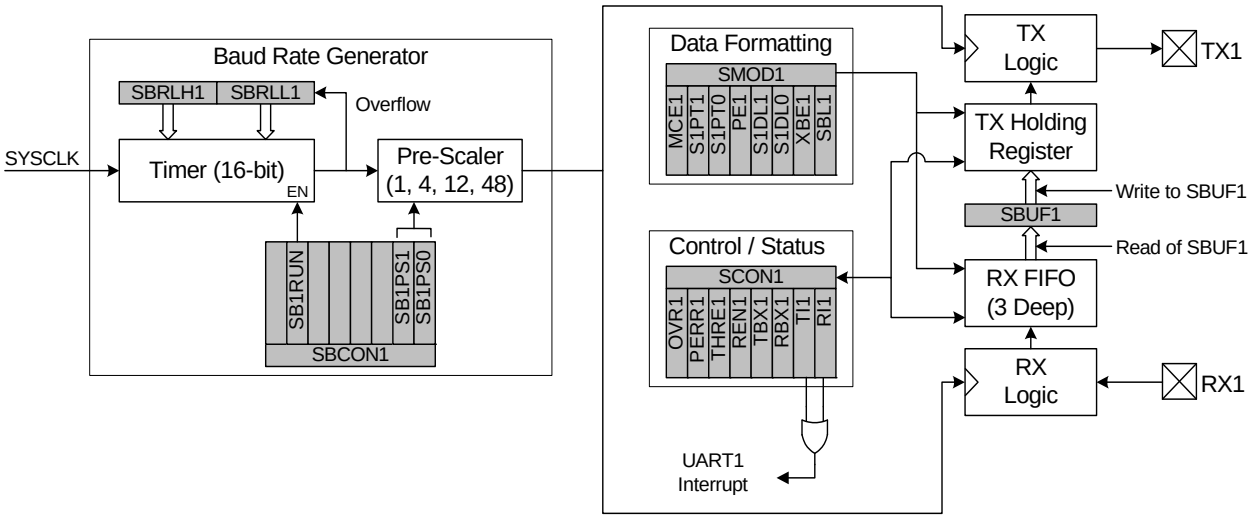

Figure 21.1. UART1 Block Diagram

21.1. Baud Rate Generator

The UART1 baud rate is generated by a dedicated 16-bit timer which runs from the controller’s core clock (SYSCLK), and has prescaler options of 1, 4, 12, or 48. The timer and prescaler options combined allow for a wide selection of baud rates over many SYSCLK frequencies.

The baud rate generator is configured using three registers: SBCON1, SBRLH1, and SBRLL1. The UART1 Baud Rate Generator Control Register (SBCON1, SFR Definition) enables or disables the baud rate generator, and selects the prescaler value for the timer. The baud rate generator must be enabled for UART1 to function. Registers SBRLH1 and SBRLL1 contain a 16-bit reload value for the dedicated 16-bit timer. The internal timer counts up from the reload value on every clock tick. On timer overflows (0xFFFF to 0x0000), the timer is reloaded. For reliable UART operation, it is recommended that the UART baud rate is not configured for baud rates faster than SYSCLK/16. The baud rate for UART1 is defined in Equation 21.1.

$$\text{Baud Rate} = \frac{\text{SYSCLK}}{(65536 - (\text{SBRLH1:SBRLL1}))} \times \frac{1}{2} \times \frac{1}{\text{Prescaler}}$$

Equation 21.1. UART1 Baud Rate

A quick reference for typical baud rates and system clock frequencies is given in Table 21.1.

Table 21.1. Baud Rate Generator Settings for Standard Baud Rates

	Target Baud Rate (bps)	Actual Baud Rate (bps)	Baud Rate Error	Oscillator Divide Factor	SB1PS[1:0] (Prescaler Bits)	Reload Value in SBRLH1:SBRLL1
SYSCLK = 12 MHz	230400	230769	0.16%	52	11	0xFFE6
	115200	115385	0.16%	104	11	0xFFCC
	57600	57692	0.16%	208	11	0xFF98
	28800	28846	0.16%	416	11	0xFF30
	14400	14388	0.08%	834	11	0xFE5F
	9600	9600	0.0%	1250	11	0xFD8F
	2400	2400	0.0%	5000	11	0xF63C
	1200	1200	0.0%	10000	11	0xEC78
SYSCLK = 24 MHz	230400	230769	0.16%	104	11	0xFFCC
	115200	115385	0.16%	208	11	0xFF98
	57600	57692	0.16%	416	11	0xFF30
	28800	28777	0.08%	834	11	0xFE5F
	14400	14406	0.04%	1666	11	0xFCBF
	9600	9600	0.0%	2500	11	0xFB1E
	2400	2400	0.0%	10000	11	0xEC78
	1200	1200	0.0%	20000	11	0xD8F0
SYSCLK = 48 MHz	230400	230769	0.16%	208	11	0xFF98
	115200	115385	0.16%	416	11	0xFF30
	57600	57554	0.08%	834	11	0xFE5F
	28800	28812	0.04%	1666	11	0xFCBF
	14400	14397	0.02%	3334	11	0xF97D
	9600	9600	0.0%	5000	11	0xF63C
	2400	2400	0.0%	20000	11	0xD8F0
	1200	1200	0.0%	40000	11	0xB1E0

21.2. Data Format

UART1 has a number of available options for data formatting. Data transfers begin with a start bit (logic low), followed by the data bits (sent LSB-first), a parity or extra bit (if selected), and end with one or two stop bits (logic high). The data length is variable between 5 and 8 bits. A parity bit can be appended to the data, and automatically generated and detected by hardware for even, odd, mark, or space parity. The stop

bit length is selectable between short (1 bit time) and long (1.5 or 2 bit times), and a multi-processor communication mode is available for implementing networked UART buses. All of the data formatting options can be configured using the SMOD1 register, shown in SFR Definition . Figure 21.2 shows the timing for a UART1 transaction without parity or an extra bit enabled. Figure 21.3 shows the timing for a UART1 transaction with parity enabled (PE1 = 1). Figure 21.4 is an example of a UART1 transaction when the extra bit is enabled (XBE1 = 1). Note that the extra bit feature is not available when parity is enabled, and the second stop bit is only an option for data lengths of 6, 7, or 8 bits.

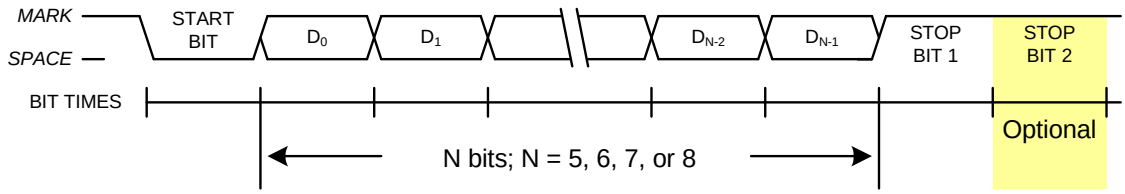

Figure 21.2. UART1 Timing Without Parity or Extra Bit

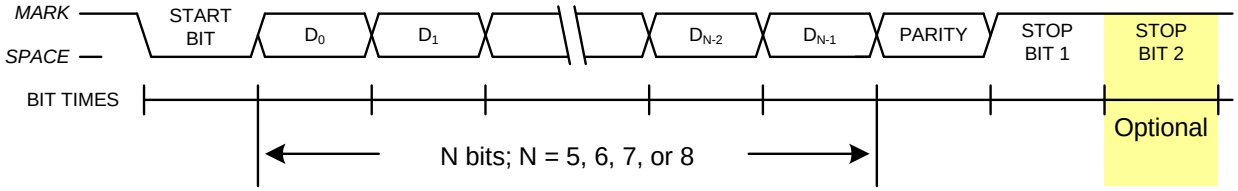

Figure 21.3. UART1 Timing With Parity

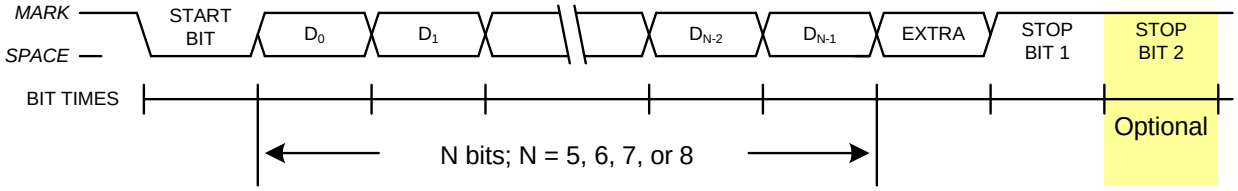

Figure 21.4. UART1 Timing With Extra Bit

21.3. Configuration and Operation

UART1 provides standard asynchronous, full duplex communication. It can operate in a point-to-point serial communications application, or as a node on a multi-processor serial interface. To operate in a point-to-point application, where there are only two devices on the serial bus, the MCE1 bit in SMOD1 should be cleared to 0. For operation as part of a multi-processor communications bus, the MCE1 and XBE1 bits should both be set to 1. In both types of applications, data is transmitted from the microcontroller on the TX1 pin, and received on the RX1 pin. The TX1 and RX1 pins are configured using the crossbar and the Port I/O registers, as detailed in Section “17. Port Input/Output” on page 97.

In typical UART communications, The transmit (TX) output of one device is connected to the receive (RX) input of the other device, either directly or through a bus transceiver, as shown in Figure 21.5.

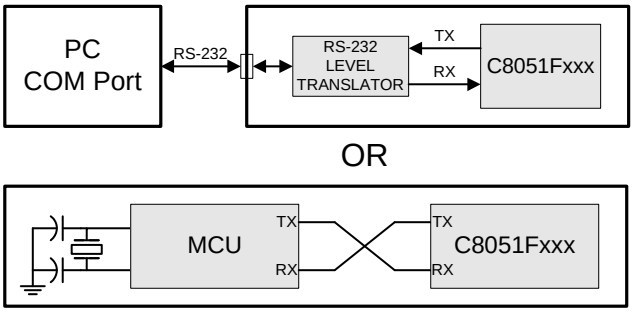

Figure 21.5. Typical UART Interconnect Diagram

21.3.1. Data Transmission

Data transmission is double-buffered, and begins when software writes a data byte to the SBUF1 register. Writing to SBUF1 places data in the Transmit Holding Register, and the Transmit Holding Register Empty flag (THRE1) will be cleared to 0. If the UARTs shift register is empty (i.e. no transmission is in progress) the data will be placed in the shift register, and the THRE1 bit will be set to 1. If a transmission is in progress, the data will remain in the Transmit Holding Register until the current transmission is complete. The TI1 Transmit Interrupt Flag (SCON1.1) will be set at the end of any transmission (the beginning of the stop-bit time). If enabled, an interrupt will occur when TI1 is set.

If the extra bit function is enabled (XBE1 = 1) and the parity function is disabled (PE1 = 0), the value of the TBX1 (SCON1.3) bit will be sent in the extra bit position. When the parity function is enabled (PE1 = 1), hardware will generate the parity bit according to the selected parity type (selected with S1PT[1:0]), and append it to the data field. Note: when parity is enabled, the extra bit function is not available.

21.3.2. Data Reception

Data reception can begin any time after the REN1 Receive Enable bit (SCON1.4) is set to logic 1. After the stop bit is received, the data byte will be stored in the receive FIFO if the following conditions are met: the receive FIFO (3 bytes deep) must not be full, and the stop bit(s) must be logic 1. In the event that the receive FIFO is full, the incoming byte will be lost, and a Receive FIFO Overrun Error will be generated (OVR1 in register SCON1 will be set to logic 1). If the stop bit(s) were logic 0, the incoming data will not be stored in the receive FIFO. If the reception conditions are met, the data is stored in the receive FIFO, and the RI1 flag will be set. Note: when MCE1 = 1, RI1 will only be set if the extra bit was equal to 1. Data can be read from the receive FIFO by reading the SBUF1 register. The SBUF1 register represents the oldest byte in the FIFO. After SBUF1 is read, the next byte in the FIFO is immediately loaded into SBUF1, and space is made available in the FIFO for another incoming byte. If enabled, an interrupt will occur when RI1 is set. RI1 can only be cleared to '0' by software when there is no more information in the FIFO. The recommended procedure to empty the FIFO contents is:

1. Clear RI1 to 0.
2. Read SBUF1.
3. Check RI1, and repeat at Step 1 if RI1 is set to 1.

If the extra bit function is enabled (XBE1 = 1) and the parity function is disabled (PE1 = 0), the extra bit for the oldest byte in the FIFO can be read from the RBX1 bit (SCON1.2). If the extra bit function is not enabled, the value of the stop bit for the oldest FIFO byte will be presented in RBX1. When the parity function is enabled (PE1 = 1), hardware will check the received parity bit against the selected parity type

(selected with S1PT[1:0]) when receiving data. If a byte with parity error is received, the PERR1 flag will be set to 1. This flag must be cleared by software. Note: when parity is enabled, the extra bit function is not available.

21.3.3. Multiprocessor Communications

UART1 supports multiprocessor communication between a master processor and one or more slave processors by special use of the extra data bit. When a master processor wants to transmit to one or more slaves, it first sends an address byte to select the target(s). An address byte differs from a data byte in that its extra bit is logic 1; in a data byte, the extra bit is always set to logic 0.

Setting the MCE1 bit (SMOD1.7) of a slave processor configures its UART such that when a stop bit is received, the UART will generate an interrupt only if the extra bit is logic 1 (RBX1 = 1) signifying an address byte has been received. In the UART interrupt handler, software will compare the received address with the slave's own assigned address. If the addresses match, the slave will clear its MCE1 bit to enable interrupts on the reception of the following data byte(s). Slaves that weren't addressed leave their MCE1 bits set and do not generate interrupts on the reception of the following data bytes, thereby ignoring the data. Once the entire message is received, the addressed slave resets its MCE1 bit to ignore all transmissions until it receives the next address byte.

Multiple addresses can be assigned to a single slave and/or a single address can be assigned to multiple slaves, thereby enabling "broadcast" transmissions to more than one slave simultaneously. The master processor can be configured to receive all transmissions or a protocol can be implemented such that the master/slave role is temporarily reversed to enable half-duplex transmission between the original master and slave(s).

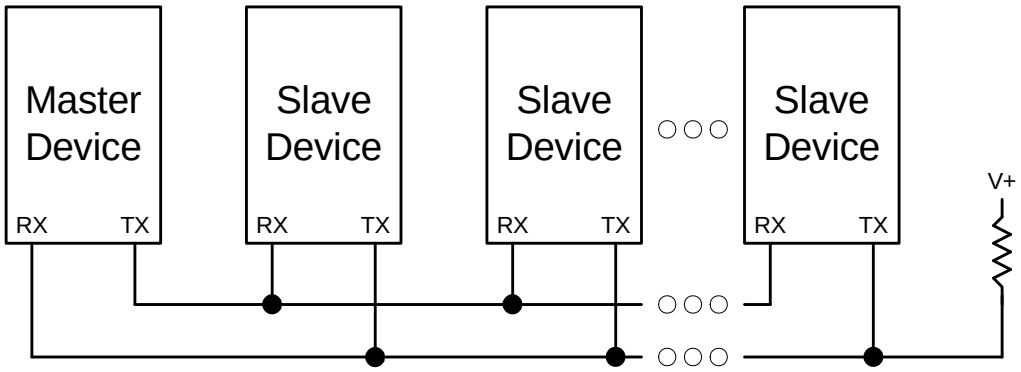

Figure 21.6. UART Multi-Processor Mode Interconnect Diagram

SFR Definition 21.1. SCON1: UART1 Control

Bit	7	6	5	4	3	2	1	0
Name	OVR1	PERR1	THRE1	REN1	TBX1	RBX1	TI1	RI1
Type	R/W	R/W	R	R/W	R/W	R/W	R/W	R/W
Reset	0	0	1	0	0	0	0	0

SFR Address = 0xD2

Bit	Name	Function
7	OVR1	**Receive FIFO Overrun Flag.** This bit indicates a receive FIFO overrun condition, where an incoming character is discarded due to a full FIFO. This bit must be cleared to 0 by software. 0: Receive FIFO Overrun has not occurred. 1: Receive FIFO Overrun has occurred.
6	PERR1	**Parity Error Flag.** When parity is enabled, this bit indicates that a parity error has occurred. It is set to 1 when the parity of the oldest byte in the FIFO does not match the selected Parity Type. This bit must be cleared to 0 by software. 0: Parity Error has not occurred. 1: Parity Error has occurred.
5	THRE1	**Transmit Holding Register Empty Flag.** 0: Transmit Holding Register not Empty - do not write to SBUF1. 1: Transmit Holding Register Empty - it is safe to write to SBUF1.
4	REN1	**Receive Enable.** This bit enables/disables the UART receiver. When disabled, bytes can still be read from the receive FIFO. 0: UART1 reception disabled. 1: UART1 reception enabled.
3	TBX1	**Extra Transmission Bit.** The logic level of this bit will be assigned to the extra transmission bit when XBE1 = 1. This bit is not used when Parity is enabled.
2	RBX1	**Extra Receive Bit.** RBX1 is assigned the value of the extra bit when XBE1 = 1. If XBE1 is cleared to 0, RBX1 is assigned the logic level of the first stop bit. This bit is not valid when Parity is enabled.
1	TI1	**Transmit Interrupt Flag.** Set to a 1 by hardware after data has been transmitted at the beginning of the STOP bit. When the UART1 interrupt is enabled, setting this bit causes the CPU to vector to the UART1 interrupt service routine. This bit must be cleared manually by software.
0	RI1	**Receive Interrupt Flag.** Set to 1 by hardware when a byte of data has been received by UART1 (set at the STOP bit sampling time). When the UART1 interrupt is enabled, setting this bit to 1 causes the CPU to vector to the UART1 interrupt service routine. This bit must be cleared manually by software. Note that RI1 will remain set to '1' as long as there is still data in the UART FIFO. After the last byte has been shifted from the FIFO to SBUF1, RI1 can be cleared.

SFR Definition 21.2. SMOD1: UART1 Mode

Bit	7	6	5	4	3	2	1	0
Name	MCE1	S1PT[1:0]		PE1	S1DL[1:0]		XBE1	SBL1
Type	R/W	R/W		R/W	R/W		R/W	R/W
Reset	0	0	0	0	1	1	0	0

SFR Address = 0xE5

Bit	Name	Function
7	MCE1	**Multiprocessor Communication Enable.** 0: RI will be activated if stop bit(s) are 1. 1: RI will be activated if stop bit(s) and extra bit are 1 (extra bit must be enabled using XBE1). Note: This function is not available when hardware parity is enabled.
6:5	S1PT[1:0]	**Parity Type Bits.** 00: Odd 01: Even 10: Mark 11: Space
4	PE1	**Parity Enable.** This bit activates hardware parity generation and checking. The parity type is selected by bits S1PT1-0 when parity is enabled. 0: Hardware parity is disabled. 1: Hardware parity is enabled.
3:2	S1DL[1:0]	**Data Length.** 00: 5-bit data 01: 6-bit data 10: 7-bit data 11: 8-bit data
1	XBE1	**Extra Bit Enable.** When enabled, the value of TBX1 will be appended to the data field. 0: Extra Bit Disabled. 1: Extra Bit Enabled.
0	SBL1	**Stop Bit Length.** 0: Short—Stop bit is active for one bit time. 1: Long—Stop bit is active for two bit times (data length = 6, 7, or 8 bits), or 1.5 bit times (data length = 5 bits).

SFR Definition 21.3. SBUF1: UART1 Data Buffer

Bit	7	6	5	4	3	2	1	0
Name	SBUF1[7:0]							
Type	R/W							
Reset	0	0	0	0	0	0	0	0

SFR Address = 0xD3

Bit	Name	Description	Write	Read
7:0	SBUF1[7:0]	**Serial Data Buffer Bits.** This SFR is used to both send data from the UART and to read received data from the UART1 receive FIFO.	Writing a byte to SBUF1 initiates the transmission. When data is written to SBUF1, it first goes to the Transmit Holding Register, where it is held for serial transmission. When the transmit shift register is available, data is transferred into the shift register, and SBUF1 may be written again.	Reading SBUF1 retrieves data from the receive FIFO. When read, the oldest byte in the receive FIFO is returned, and removed from the FIFO. Up to three bytes may be held in the FIFO. If there are additional bytes available in the FIFO, the RI1 bit will remain at logic 1, even after being cleared by software.

SFR Definition 21.4. SBCON1: UART1 Baud Rate Generator Control

Bit	7	6	5	4	3	2	1	0
Name	Reserved	SB1RUN	Reserved	Reserved	Reserved	Reserved	SB1PS[1:0]	
Type	R/W	R/W	R/W	R/W	R/W	R/W	R/W	
Reset	0	0	0	0	0	0	0	0

SFR Address = 0xAC

Bit	Name	Function
7	Reserved	Reserved. Read = 0b. Must Write 0b.
6	SB1RUN	**Baud Rate Generator Enable.** 0: Baud Rate Generator is disabled. UART1 will not function. 1: Baud Rate Generator is enabled.
5:2	Reserved	Reserved. Read = 0000b. Must Write 0000b.
1:0	SB1PS[1:0]	**Baud Rate Prescaler Select.** 00: Prescaler = 12 01: Prescaler = 4 10: Prescaler = 48 11: Prescaler = 1

SFR Definition 21.5. SBRLH1: UART1 Baud Rate Generator High Byte

Bit	7	6	5	4	3	2	1	0
Name	SBRLH1[7:0]							
Type	R/W							
Reset	0	0	0	0	0	0	0	0

SFR Address = 0xB5

Bit	Name	Function
7:0	SBRLH1[7:0]	**UART1 Baud Rate Reload High Bits.** High Byte of reload value for UART1 Baud Rate Generator.

SFR Definition 21.6. SBRLL1: UART1 Baud Rate Generator Low Byte

Bit	7	6	5	4	3	2	1	0
Name	SBRLL1[7:0]							
Type	R/W							
Reset	0	0	0	0	0	0	0	0

SFR Address = 0xB4

Bit	Name	Function
7:0	SBRLL1[7:0]	**UART1 Baud Rate Reload Low Bits.** Low Byte of reload value for UART1 Baud Rate Generator.

22. Enhanced Serial Peripheral Interface (SPI0)

The Enhanced Serial Peripheral Interface (SPI0) provides access to a flexible, full-duplex synchronous serial bus. SPI0 can operate as a master or slave device in both 3-wire or 4-wire modes, and supports multiple masters and slaves on a single SPI bus. The slave-select (NSS) signal can be configured as an input to select SPI0 in slave mode, or to disable Master Mode operation in a multi-master environment, avoiding contention on the SPI bus when more than one master attempts simultaneous data transfers. NSS can also be configured as a chip-select output in master mode, or disabled for 3-wire operation. Additional general purpose port I/O pins can be used to select multiple slave devices in master mode.

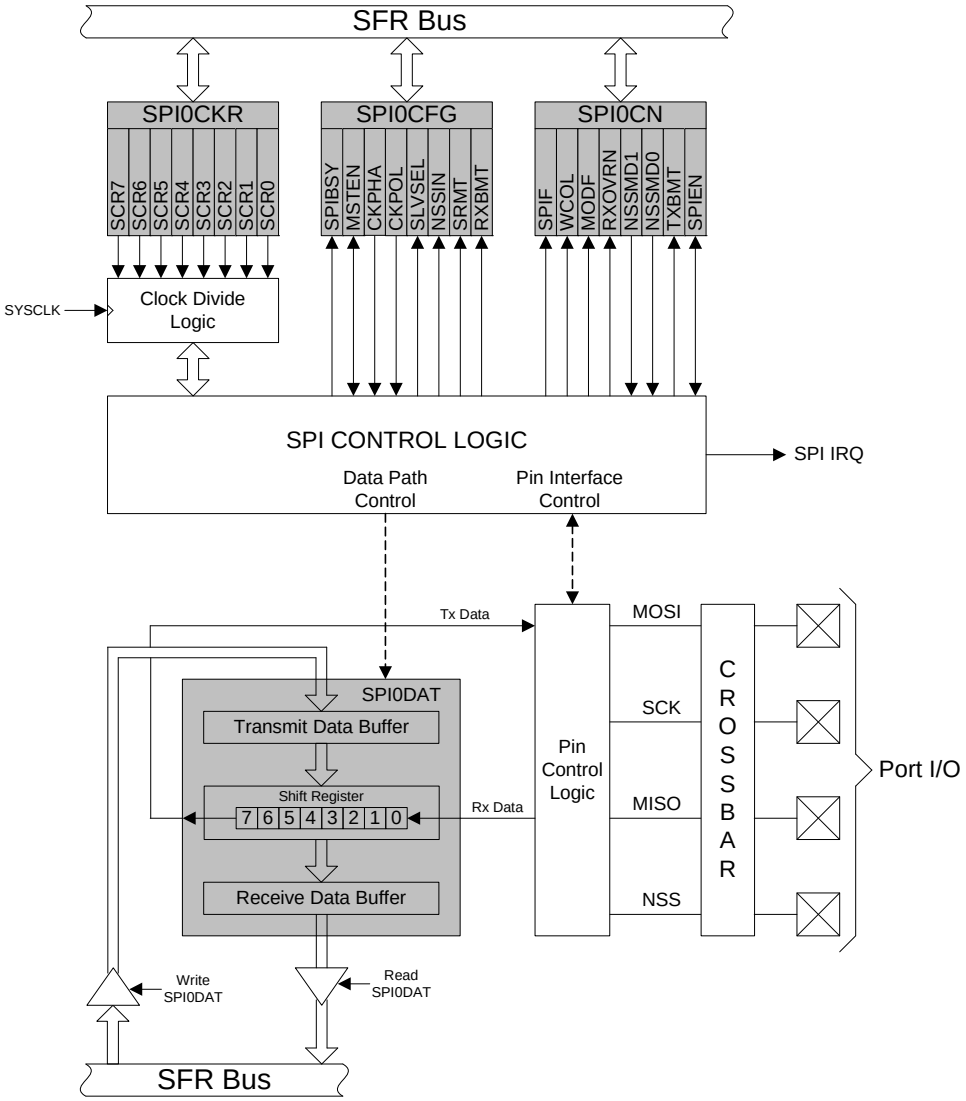

Figure 22.1. SPI Block Diagram

22.1. Signal Descriptions

The four signals used by SPI0 (MOSI, MISO, SCK, NSS) are described below.

22.1.1. Master Out, Slave In (MOSI)

The master-out, slave-in (MOSI) signal is an output from a master device and an input to slave devices. It is used to serially transfer data from the master to the slave. This signal is an output when SPI0 is operating as a master and an input when SPI0 is operating as a slave. Data is transferred most-significant bit first. When configured as a master, MOSI is driven by the MSB of the shift register in both 3- and 4-wire mode.

22.1.2. Master In, Slave Out (MISO)

The master-in, slave-out (MISO) signal is an output from a slave device and an input to the master device. It is used to serially transfer data from the slave to the master. This signal is an input when SPI0 is operating as a master and an output when SPI0 is operating as a slave. Data is transferred most-significant bit first. The MISO pin is placed in a high-impedance state when the SPI module is disabled and when the SPI operates in 4-wire mode as a slave that is not selected. When acting as a slave in 3-wire mode, MISO is always driven by the MSB of the shift register.

22.1.3. Serial Clock (SCK)

The serial clock (SCK) signal is an output from the master device and an input to slave devices. It is used to synchronize the transfer of data between the master and slave on the MOSI and MISO lines. SPI0 generates this signal when operating as a master. The SCK signal is ignored by a SPI slave when the slave is not selected (NSS = 1) in 4-wire slave mode.

22.1.4. Slave Select (NSS)

The function of the slave-select (NSS) signal is dependent on the setting of the NSSMD1 and NSSMD0 bits in the SPI0CN register. There are three possible modes that can be selected with these bits:

1. NSSMD[1:0] = 00: 3-Wire Master or 3-Wire Slave Mode: SPI0 operates in 3-wire mode, and NSS is disabled. When operating as a slave device, SPI0 is always selected in 3-wire mode. Since no select signal is present, SPI0 must be the only slave on the bus in 3-wire mode. This is intended for point-to-point communication between a master and one slave.
2. NSSMD[1:0] = 01: 4-Wire Slave or Multi-Master Mode: SPI0 operates in 4-wire mode, and NSS is enabled as an input. When operating as a slave, NSS selects the SPI0 device. When operating as a master, a 1-to-0 transition of the NSS signal disables the master function of SPI0 so that multiple master devices can be used on the same SPI bus.
3. NSSMD[1:0] = 1x: 4-Wire Master Mode: SPI0 operates in 4-wire mode, and NSS is enabled as an output. The setting of NSSMD0 determines what logic level the NSS pin will output. This configuration should only be used when operating SPI0 as a master device.

See Figure 22.2, Figure 22.3, and Figure 22.4 for typical connection diagrams of the various operational modes. **Note that the setting of NSSMD bits affects the pinout of the device.** When in 3-wire master or 3-wire slave mode, the NSS pin will not be mapped by the crossbar. In all other modes, the NSS signal will be mapped to a pin on the device. See Section “17. Port Input/Output” on page 97 for general purpose port I/O and crossbar information.

22.2. SPI0 Master Mode Operation

A SPI master device initiates all data transfers on a SPI bus. SPI0 is placed in master mode by setting the Master Enable flag (MSTEN, SPI0CN.6). Writing a byte of data to the SPI0 data register (SPI0DAT) when in master mode writes to the transmit buffer. If the SPI shift register is empty, the byte in the transmit buffer is moved to the shift register, and a data transfer begins. The SPI0 master immediately shifts out the data serially on the MOSI line while providing the serial clock on SCK. The SPIF (SPI0CN.7) flag is set to logic

1 at the end of the transfer. If interrupts are enabled, an interrupt request is generated when the SPIF flag is set. While the SPI0 master transfers data to a slave on the MOSI line, the addressed SPI slave device simultaneously transfers the contents of its shift register to the SPI master on the MISO line in a full-duplex operation. Therefore, the SPIF flag serves as both a transmit-complete and receive-data-ready flag. The data byte received from the slave is transferred MSB-first into the master's shift register. When a byte is fully shifted into the register, it is moved to the receive buffer where it can be read by the processor by reading SPI0DAT.

When configured as a master, SPI0 can operate in one of three different modes: multi-master mode, 3-wire single-master mode, and 4-wire single-master mode. The default, multi-master mode is active when NSSMD1 (SPI0CN.3) = 0 and NSSMD0 (SPI0CN.2) = 1. In this mode, NSS is an input to the device, and is used to disable the master SPI0 when another master is accessing the bus. When NSS is pulled low in this mode, MSTEN (SPI0CN.6) and SPIEN (SPI0CN.0) are set to 0 to disable the SPI master device, and a Mode Fault is generated (MODF, SPI0CN.5 = 1). Mode Fault will generate an interrupt if enabled. SPI0 must be manually re-enabled in software under these circumstances. In multi-master systems, devices will typically default to being slave devices while they are not acting as the system master device. In multi-master mode, slave devices can be addressed individually (if needed) using general-purpose I/O pins. Figure 22.2 shows a connection diagram between two master devices in multiple-master mode.

3-wire single-master mode is active when NSSMD1 (SPI0CN.3) = 0 and NSSMD0 (SPI0CN.2) = 0. In this mode, NSS is not used, and is not mapped to an external port pin through the crossbar. Any slave devices that must be addressed in this mode should be selected using general-purpose I/O pins. Figure 22.3 shows a connection diagram between a master device in 3-wire master mode and a slave device.

4-wire single-master mode is active when NSSMD1 (SPI0CN.3) = 1. In this mode, NSS is configured as an output pin, and can be used as a slave-select signal for a single SPI device. In this mode, the output value of NSS is controlled (in software) with the bit NSSMD0 (SPI0CN.2). Additional slave devices can be addressed using general-purpose I/O pins. Figure 22.4 shows a connection diagram for a master device in 4-wire master mode and two slave devices.

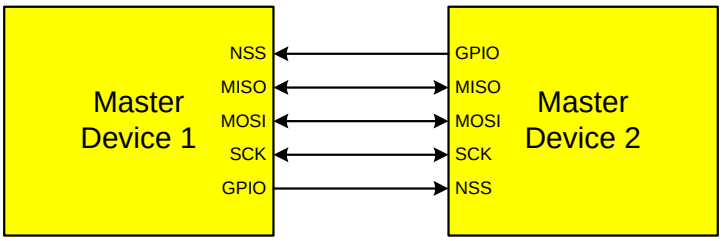

Figure 22.2. Multiple-Master Mode Connection Diagram

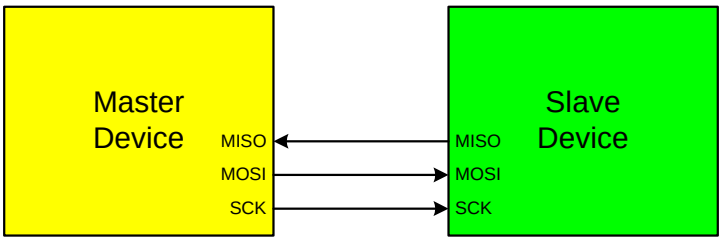

Figure 22.3. 3-Wire Single Master and 3-Wire Single Slave Mode Connection Diagram

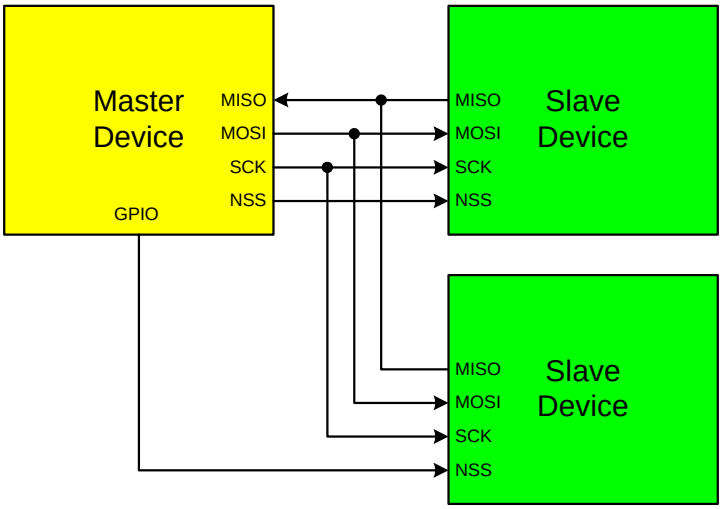

Figure 22.4. 4-Wire Single Master Mode and 4-Wire Slave Mode Connection Diagram

22.3. SPI0 Slave Mode Operation

When SPI0 is enabled and not configured as a master, it will operate as a SPI slave. As a slave, bytes are shifted in through the MOSI pin and out through the MISO pin by a master device controlling the SCK signal. A bit counter in the SPI0 logic counts SCK edges. When 8 bits have been shifted through the shift register, the SPIF flag is set to logic 1, and the byte is copied into the receive buffer. Data is read from the receive buffer by reading SPI0DAT. A slave device cannot initiate transfers. Data to be transferred to the master device is pre-loaded into the shift register by writing to SPI0DAT. Writes to SPI0DAT are double-buffered, and are placed in the transmit buffer first. If the shift register is empty, the contents of the transmit buffer will immediately be transferred into the shift register. When the shift register already contains data, the SPI will load the shift register with the transmit buffer's contents after the last SCK edge of the next (or current) SPI transfer.

When configured as a slave, SPI0 can be configured for 4-wire or 3-wire operation. The default, 4-wire slave mode, is active when NSSMD1 (SPI0CN.3) = 0 and NSSMD0 (SPI0CN.2) = 1. In 4-wire mode, the NSS signal is routed to a port pin and configured as a digital input. SPI0 is enabled when NSS is logic 0, and disabled when NSS is logic 1. The bit counter is reset on a falling edge of NSS. Note that the NSS signal must be driven low at least 2 system clocks before the first active edge of SCK for each byte transfer. Figure 22.4 shows a connection diagram between two slave devices in 4-wire slave mode and a master device.

3-wire slave mode is active when NSSMD1 (SPI0CN.3) = 0 and NSSMD0 (SPI0CN.2) = 0. NSS is not used in this mode, and is not mapped to an external port pin through the crossbar. Since there is no way of uniquely addressing the device in 3-wire slave mode, SPI0 must be the only slave device present on the bus. It is important to note that in 3-wire slave mode there is no external means of resetting the bit counter that determines when a full byte has been received. The bit counter can only be reset by disabling and re-enabling SPI0 with the SPIEN bit. Figure 22.3 shows a connection diagram between a slave device in 3-wire slave mode and a master device.

22.4. SPI0 Interrupt Sources

When SPI0 interrupts are enabled, the following four flags will generate an interrupt when they are set to logic 1:

All of the following bits must be cleared by software.

- The SPI Interrupt Flag, SPIF (SPI0CN.7) is set to logic 1 at the end of each byte transfer. This flag can occur in all SPI0 modes.
- The Write Collision Flag, WCOL (SPI0CN.6) is set to logic 1 if a write to SPI0DAT is attempted when the transmit buffer has not been emptied to the SPI shift register. When this occurs, the write to SPI0DAT will be ignored, and the transmit buffer will not be written.This flag can occur in all SPI0 modes.
- The Mode Fault Flag MODF (SPI0CN.5) is set to logic 1 when SPI0 is configured as a master, and for multi-master mode and the NSS pin is pulled low. When a Mode Fault occurs, the MSTEN and SPIEN bits in SPI0CN are set to logic 0 to disable SPI0 and allow another master device to access the bus.
- The Receive Overrun Flag RXOVRN (SPI0CN.4) is set to logic 1 when configured as a slave, and a transfer is completed and the receive buffer still holds an unread byte from a previous transfer. The new byte is not transferred to the receive buffer, allowing the previously received data byte to be read. The data byte which caused the overrun is lost.

22.5. Serial Clock Phase and Polarity

Four combinations of serial clock phase and polarity can be selected using the clock control bits in the SPI0 Configuration Register (SPI0CFG). The CKPHA bit (SPI0CFG.5) selects one of two clock phases (edge used to latch the data). The CKPOL bit (SPI0CFG.4) selects between an active-high or active-low clock. Both master and slave devices must be configured to use the same clock phase and polarity. SPI0 should be disabled (by clearing the SPIEN bit, SPI0CN.0) when changing the clock phase or polarity. The clock and data line relationships for master mode are shown in Figure 22.5. For slave mode, the clock and data relationships are shown in Figure 22.6 and Figure 22.7. Note that CKPHA should be set to 0 on both the master and slave SPI when communicating between two Silicon Labs C8051 devices.

The SPI0 Clock Rate Register (SPI0CKR) as shown in SFR Definition 22.3 controls the master mode serial clock frequency. This register is ignored when operating in slave mode. When the SPI is configured as a master, the maximum data transfer rate (bits/sec) is one-half the system clock frequency or 12.5 MHz, whichever is slower. When the SPI is configured as a slave, the maximum data transfer rate (bits/sec) for full-duplex operation is 1/10 the system clock frequency, provided that the master issues SCK, NSS (in 4-wire slave mode), and the serial input data synchronously with the slave's system clock. If the master issues SCK, NSS, and the serial input data asynchronously, the maximum data transfer rate (bits/sec) must be less than 1/10 the system clock frequency. In the special case where the master only wants to transmit data to the slave and does not need to receive data from the slave (i.e. half-duplex operation), the SPI slave can receive data at a maximum data transfer rate (bits/sec) of 1/4 the system clock frequency. This is provided that the master issues SCK, NSS, and the serial input data synchronously with the slave's system clock.

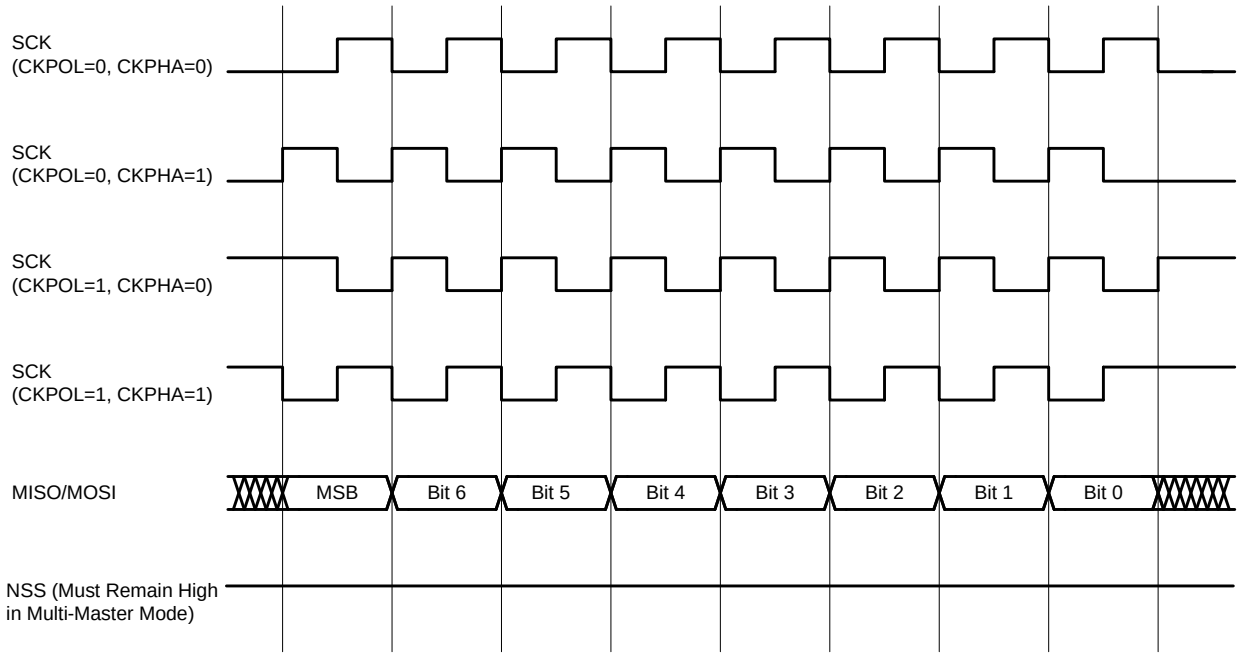

Figure 22.5. Master Mode Data/Clock Timing

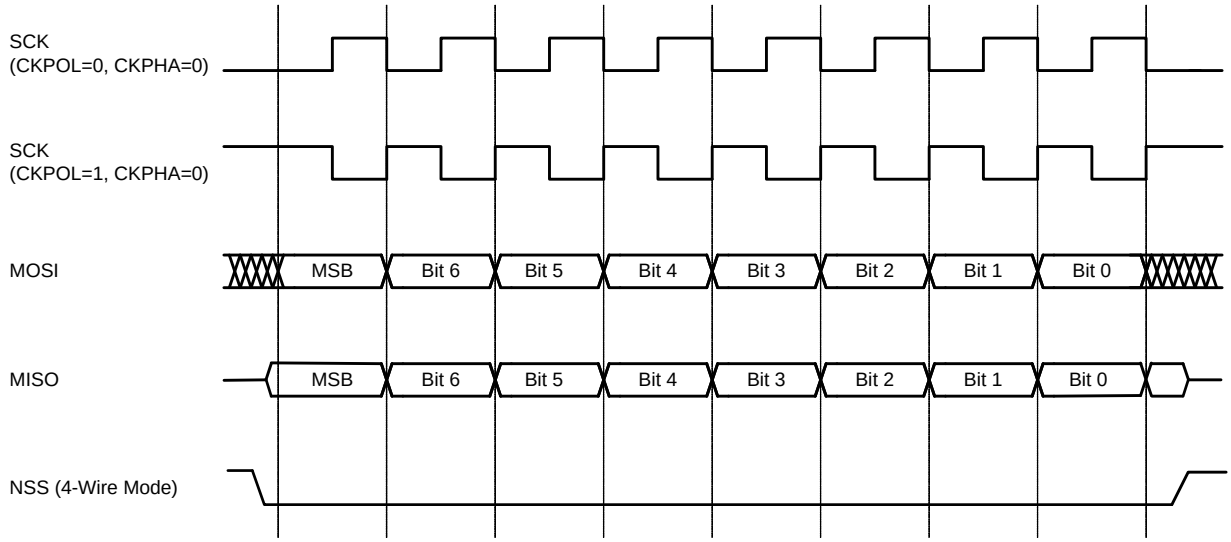

Figure 22.6. Slave Mode Data/Clock Timing (CKPHA = 0)

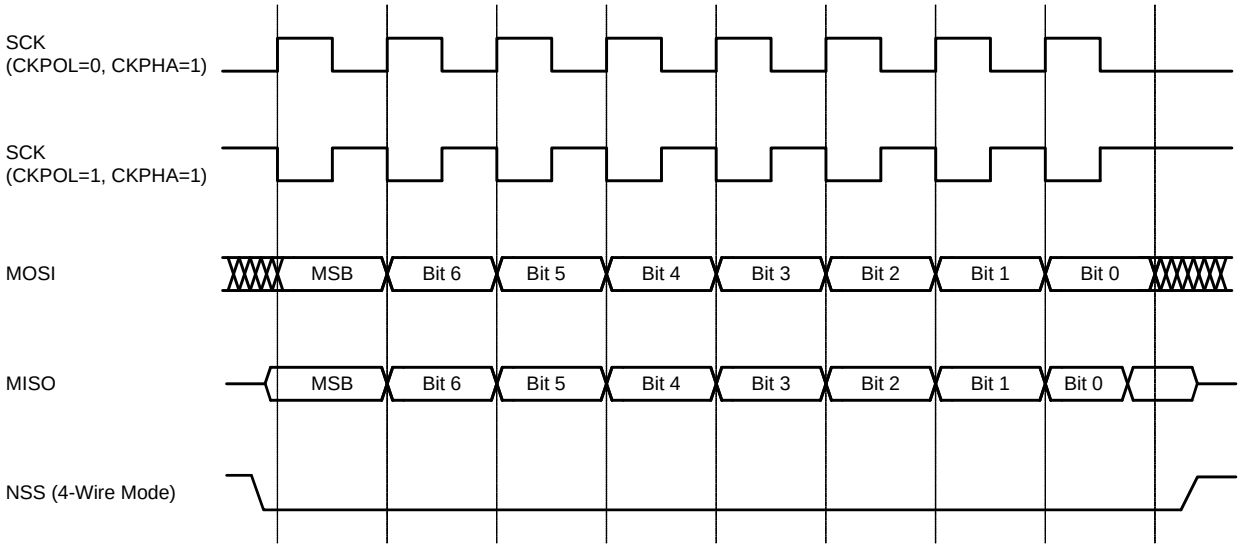

Figure 22.7. Slave Mode Data/Clock Timing (CKPHA = 1)

22.6. SPI Special Function Registers

SPI0 is accessed and controlled through four special function registers in the system controller: SPI0CN Control Register, SPI0DAT Data Register, SPI0CFG Configuration Register, and SPI0CKR Clock Rate Register. The four special function registers related to the operation of the SPI0 Bus are described in the following figures.

SFR Definition 22.1. SPI0CFG: SPI0 Configuration

Bit	7	6	5	4	3	2	1	0
Name	SPIBSY	MSTEN	CKPHA	CKPOL	SLVSEL	NSSIN	SRMT	RXBMT
Type	R	R/W	R/W	R/W	R	R	R	R
Reset	0	0	0	0	0	1	1	1

SFR Address = 0xA1

Bit	Name	Function
7	SPIBSY	**SPI Busy.** This bit is set to logic 1 when a SPI transfer is in progress (master or slave mode).
6	MSTEN	**Master Mode Enable.** 0: Disable master mode. Operate in slave mode. 1: Enable master mode. Operate as a master.
5	CKPHA	**SPI0 Clock Phase.** 0: Data centered on first edge of SCK period.* 1: Data centered on second edge of SCK period.*
4	CKPOL	**SPI0 Clock Polarity.** 0: SCK line low in idle state. 1: SCK line high in idle state.
3	SLVSEL	**Slave Selected Flag.** This bit is set to logic 1 whenever the NSS pin is low indicating SPI0 is the selected slave. It is cleared to logic 0 when NSS is high (slave not selected). This bit does not indicate the instantaneous value at the NSS pin, but rather a de-glitched version of the pin input.
2	NSSIN	**NSS Instantaneous Pin Input.** This bit mimics the instantaneous value that is present on the NSS port pin at the time that the register is read. This input is not de-glitched.
1	SRMT	**Shift Register Empty (valid in slave mode only).** This bit will be set to logic 1 when all data has been transferred in/out of the shift register, and there is no new information available to read from the transmit buffer or write to the receive buffer. It returns to logic 0 when a data byte is transferred to the shift register from the transmit buffer or by a transition on SCK. SRMT = 1 when in Master Mode.
0	RXBMT	**Receive Buffer Empty (valid in slave mode only).** This bit will be set to logic 1 when the receive buffer has been read and contains no new information. If there is new information available in the receive buffer that has not been read, this bit will return to logic 0. RXBMT = 1 when in Master Mode.

Note: In slave mode, data on MOSI is sampled in the center of each data bit. In master mode, data on MISO is sampled one SYSCLK before the end of each data bit, to provide maximum settling time for the slave device. See Table 22.1 for timing parameters.

SFR Definition 22.2. SPI0CN: SPI0 Control

Bit	7	6	5	4	3	2	1	0
Name	SPIF	WCOL	MODF	RXOVRN	NSSMD[1:0]		TXBMT	SPIEN
Type	R/W	R/W	R/W	R/W	R/W		R	R/W
Reset	0	0	0	0	0	1	1	0

SFR Address = 0xF8; Bit-Addressable

Bit	Name	Function
7	SPIF	**SPI0 Interrupt Flag.** This bit is set to logic 1 by hardware at the end of a data transfer. If SPI interrupts are enabled, an interrupt will be generated. This bit is not automatically cleared by hardware, and must be cleared by software.
6	WCOL	**Write Collision Flag.** This bit is set to logic 1 if a write to SPI0DAT is attempted when TXBMT is 0. When this occurs, the write to SPI0DAT will be ignored, and the transmit buffer will not be written. If SPI interrupts are enabled, an interrupt will be generated. This bit is not automatically cleared by hardware, and must be cleared by software.
5	MODF	**Mode Fault Flag.** This bit is set to logic 1 by hardware when a master mode collision is detected (NSS is low, MSTEN = 1, and NSSMD[1:0] = 01). If SPI interrupts are enabled, an interrupt will be generated. This bit is not automatically cleared by hardware, and must be cleared by software.
4	RXOVRN	**Receive Overrun Flag (valid in slave mode only).** This bit is set to logic 1 by hardware when the receive buffer still holds unread data from a previous transfer and the last bit of the current transfer is shifted into the SPI0 shift register. If SPI interrupts are enabled, an interrupt will be generated. This bit is not automatically cleared by hardware, and must be cleared by software.
3:2	NSSMD[1:0]	**Slave Select Mode.** Selects between the following NSS operation modes: (See Section 22.2 and Section 22.3). 00: 3-Wire Slave or 3-Wire Master Mode. NSS signal is not routed to a port pin. 01: 4-Wire Slave or Multi-Master Mode (Default). NSS is an input to the device. 1x: 4-Wire Single-Master Mode. NSS signal is mapped as an output from the device and will assume the value of NSSMD0.
1	TXBMT	**Transmit Buffer Empty.** This bit will be set to logic 0 when new data has been written to the transmit buffer. When data in the transmit buffer is transferred to the SPI shift register, this bit will be set to logic 1, indicating that it is safe to write a new byte to the transmit buffer.
0	SPIEN	**SPI0 Enable.** 0: SPI disabled. 1: SPI enabled.

SFR Definition 22.3. SPI0CKR: SPI0 Clock Rate

Bit	7	6	5	4	3	2	1	0
Name	SCR[7:0]							
Type	R/W							
Reset	0	0	0	0	0	0	0	0

SFR Address = 0xA2

Bit	Name	Function
7:0	SCR[7:0]	**SPI0 Clock Rate.** These bits determine the frequency of the SCK output when the SPI0 module is configured for master mode operation. The SCK clock frequency is a divided version of the system clock, and is given in the following equation, where *SYSCLK* is the system clock frequency and *SPI0CKR* is the 8-bit value held in the SPI0CKR register. $f_{SCK} = \frac{SYSCLK}{2 \times (SPI0CKR[7:0] + 1)}$ for 0 <= SPI0CKR <= 255 Example: If SYSCLK = 2 MHz and SPI0CKR = 0x04, $f_{SCK} = \frac{2000000}{2 \times (4 + 1)}$ $f_{SCK} = 200kHz$

SFR Definition 22.4. SPI0DAT: SPI0 Data

Bit	7	6	5	4	3	2	1	0
Name	SPI0DAT[7:0]							
Type	R/W							
Reset	0	0	0	0	0	0	0	0

SFR Address = 0xA3

Bit	Name	Function
7:0	SPI0DAT[7:0]	**SPI0 Transmit and Receive Data.** The SPI0DAT register is used to transmit and receive SPI0 data. Writing data to SPI0DAT places the data into the transmit buffer and initiates a transfer when in Master Mode. A read of SPI0DAT returns the contents of the receive buffer.

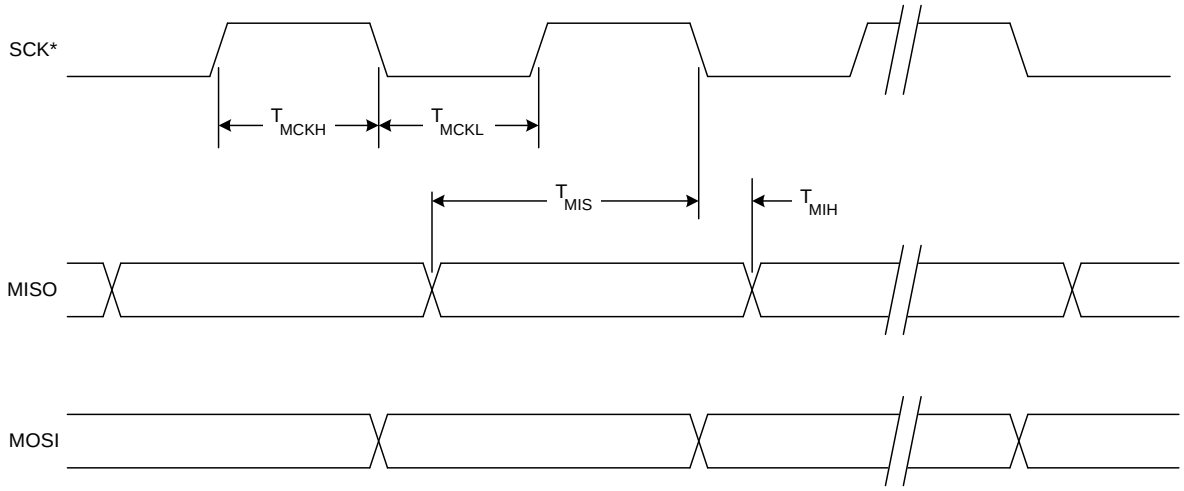

* SCK is shown for CKPOL = 0. SCK is the opposite polarity for CKPOL = 1.

Figure 22.8. SPI Master Timing (CKPHA = 0)

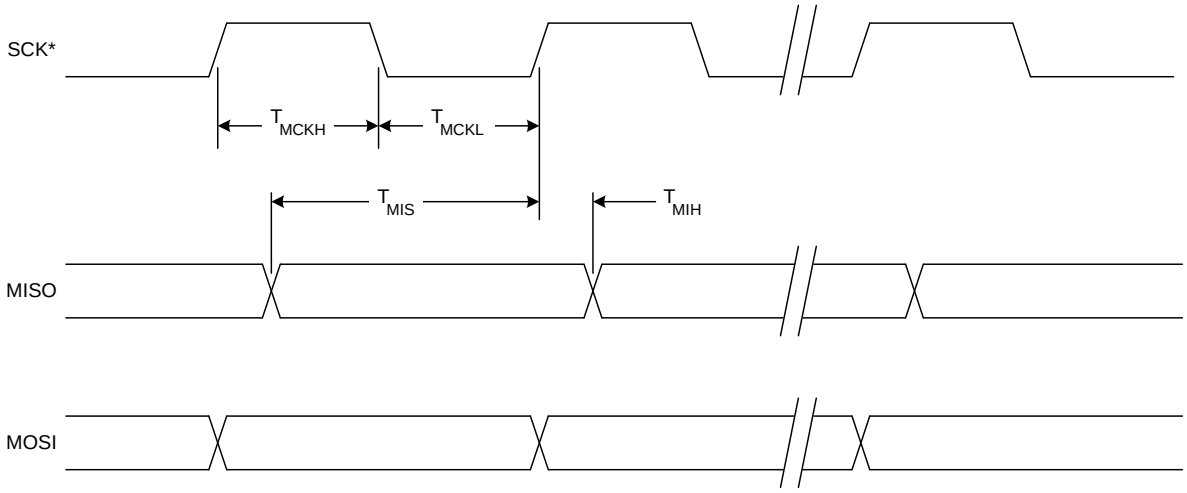

* SCK is shown for CKPOL = 0. SCK is the opposite polarity for CKPOL = 1.

Figure 22.9. SPI Master Timing (CKPHA = 1)

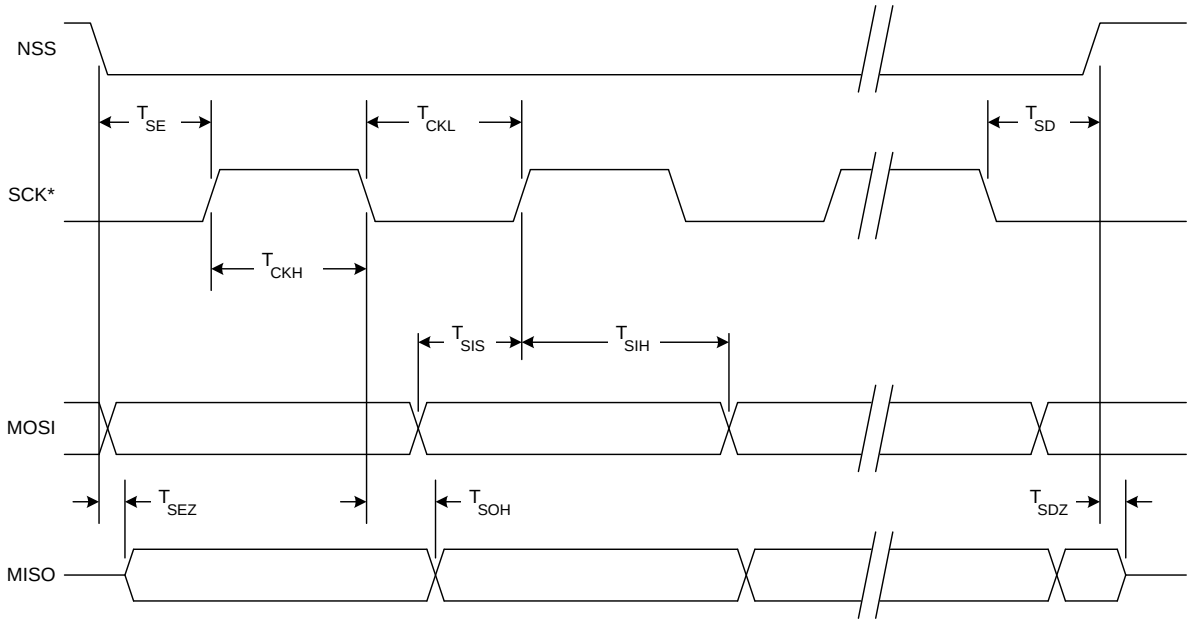

* SCK is shown for CKPOL = 0. SCK is the opposite polarity for CKPOL = 1.

Figure 22.10. SPI Slave Timing (CKPHA = 0)

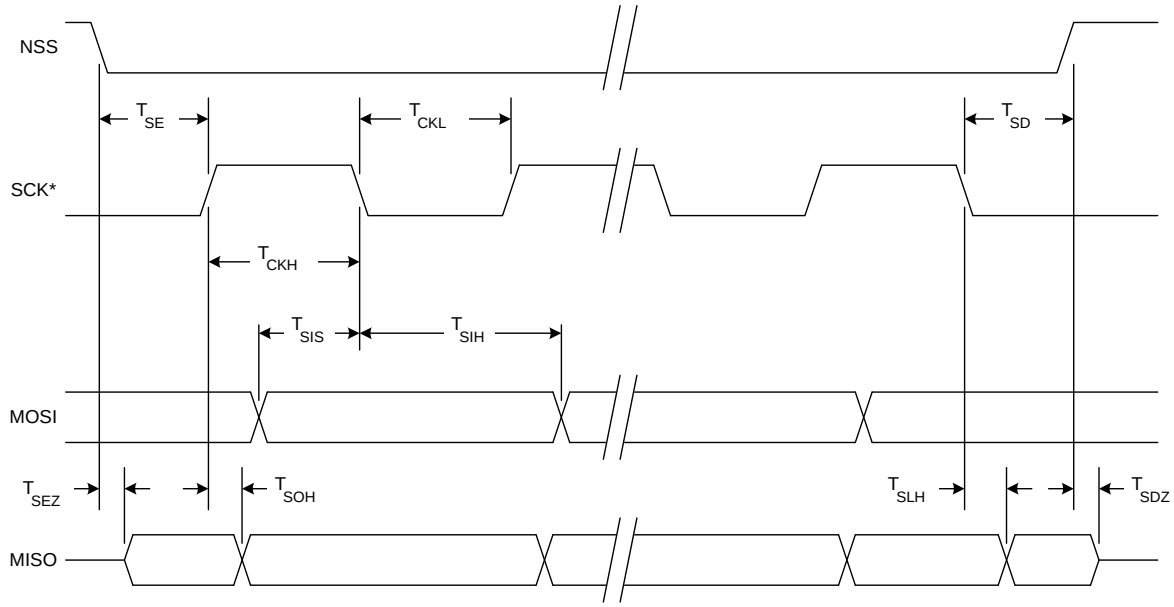

* SCK is shown for CKPOL = 0. SCK is the opposite polarity for CKPOL = 1.

Figure 22.11. SPI Slave Timing (CKPHA = 1)

Table 22.1. SPI Slave Timing Parameters

Parameter	Description	Min	Max	Units
Master Mode Timing (See Figure 22.8 and Figure 22.9)				
T_{MCKH}	SCK High Time	1 x T_{SYSCLK}	—	ns
T_{MCKL}	SCK Low Time	1 x T_{SYSCLK}	—	ns
T_{MIS}	MISO Valid to SCK Shift Edge	1 x T_{SYSCLK} + 20	—	ns
T_{MIH}	SCK Shift Edge to MISO Change	0	—	ns
Slave Mode Timing (See Figure 22.10 and Figure 22.11)				
T_{SE}	NSS Falling to First SCK Edge	2 x T_{SYSCLK}	—	ns
T_{SD}	Last SCK Edge to NSS Rising	2 x T_{SYSCLK}	—	ns
T_{SEZ}	NSS Falling to MISO Valid	—	4 x T_{SYSCLK}	ns
T_{SDZ}	NSS Rising to MISO High-Z	—	4 x T_{SYSCLK}	ns
T_{CKH}	SCK High Time	5 x T_{SYSCLK}	—	ns
T_{CKL}	SCK Low Time	5 x T_{SYSCLK}	—	ns
T_{SIS}	MOSI Valid to SCK Sample Edge	2 x T_{SYSCLK}	—	ns
T_{SIH}	SCK Sample Edge to MOSI Change	2 x T_{SYSCLK}	—	ns
T_{SOH}	SCK Shift Edge to MISO Change	—	4 x T_{SYSCLK}	ns
T_{SLH}	Last SCK Edge to MISO Change (CKPHA = 1 ONLY)	6 x T_{SYSCLK}	8 x T_{SYSCLK}	ns
Note: T_{SYSCLK} is equal to one period of the device system clock (SYSCLK).				

23. Timers

Each MCU includes four counter/timers: two are 16-bit counter/timers compatible with those found in the standard 8051, and two are 16-bit auto-reload timer for use with the SMBus or for general purpose use. These timers can be used to measure time intervals, count external events and generate periodic interrupt requests. Timer 0 and Timer 1 are nearly identical and have four primary modes of operation. Timer 2 and Timer 3 offer 16-bit and split 8-bit timer functionality with auto-reload. Additionally, Timer 3 offers the ability to be clocked from the external oscillator while the device is in Suspend mode, and can be used as a wake-up source. This allows for implementation of a very low-power system, including RTC capability.

Timer 0 and Timer 1 Modes:	Timer 2 Modes:	Timer 3 Modes:
13-bit counter/timer	16-bit timer with auto-reload	16-bit timer with auto-reload
16-bit counter/timer		
8-bit counter/timer with auto-reload	Two 8-bit timers with auto-reload	Two 8-bit timers with auto-reload
Two 8-bit counter/timers (Timer 0 only)		

Timers 0 and 1 may be clocked by one of five sources, determined by the Timer Mode Select bits (T1M–T0M) and the Clock Scale bits (SCA1–SCA0). The Clock Scale bits define a pre-scaled clock from which Timer 0 and/or Timer 1 may be clocked (See SFR Definition 23.1 for pre-scaled clock selection).

Timer 0/1 may then be configured to use this pre-scaled clock signal or the system clock. Timer 2 and Timer 3 may be clocked by the system clock, the system clock divided by 12, or the external oscillator clock source divided by 8.

Timer 0 and Timer 1 may also be operated as counters. When functioning as a counter, a counter/timer register is incremented on each high-to-low transition at the selected input pin (T0 or T1). Events with a frequency of up to one-fourth the system clock frequency can be counted. The input signal need not be periodic, but it should be held at a given level for at least two full system clock cycles to ensure the level is properly sampled.

SFR Definition 23.1. CKCON: Clock Control

Bit	7	6	5	4	3	2	1	0
Name	T3MH	T3ML	T2MH	T2ML	T1M	T0M	SCA[1:0]	
Type	R/W	R/W	R/W	R/W	R/W	R/W	R/W	
Reset	0	0	0	0	0	0	0	0

SFR Address = 0x8E

Bit	Name	Function
7	T3MH	**Timer 3 High Byte Clock Select.** Selects the clock supplied to the Timer 3 high byte (split 8-bit timer mode only). 0: Timer 3 high byte uses the clock defined by the T3XCLK bit in TMR3CN. 1: Timer 3 high byte uses the system clock.
6	T3ML	**Timer 3 Low Byte Clock Select.** Selects the clock supplied to Timer 3. Selects the clock supplied to the lower 8-bit timer in split 8-bit timer mode. 0: Timer 3 low byte uses the clock defined by the T3XCLK bit in TMR3CN. 1: Timer 3 low byte uses the system clock.
5	T2MH	**Timer 2 High Byte Clock Select.** Selects the clock supplied to the Timer 2 high byte (split 8-bit timer mode only). 0: Timer 2 high byte uses the clock defined by the T2XCLK bit in TMR2CN. 1: Timer 2 high byte uses the system clock.
4	T2ML	**Timer 2 Low Byte Clock Select.** Selects the clock supplied to Timer 2. If Timer 2 is configured in split 8-bit timer mode, this bit selects the clock supplied to the lower 8-bit timer. 0: Timer 2 low byte uses the clock defined by the T2XCLK bit in TMR2CN. 1: Timer 2 low byte uses the system clock.
3	T1	**Timer 1 Clock Select.** Selects the clock source supplied to Timer 1. Ignored when C/T1 is set to 1. 0: Timer 1 uses the clock defined by the prescale bits SCA[1:0]. 1: Timer 1 uses the system clock.
2	T0	**Timer 0 Clock Select.** Selects the clock source supplied to Timer 0. Ignored when C/T0 is set to 1. 0: Counter/Timer 0 uses the clock defined by the prescale bits SCA[1:0]. 1: Counter/Timer 0 uses the system clock.
1:0	SCA[1:0]	**Timer 0/1 Prescale Bits.** These bits control the Timer 0/1 Clock Prescaler: 00: System clock divided by 12 01: System clock divided by 4 10: System clock divided by 48 11: External clock divided by 8 (synchronized with the system clock)

23.1. Timer 0 and Timer 1

Each timer is implemented as a 16-bit register accessed as two separate bytes: a low byte (TL0 or TL1) and a high byte (TH0 or TH1). The Counter/Timer Control register (TCON) is used to enable Timer 0 and Timer 1 as well as indicate status. Timer 0 interrupts can be enabled by setting the ET0 bit in the IE register (Section “ Note that the CPU is stalled during EPROM write operations and USB FIFO MOVX accesses (see Section “10.2.3. Accessing USB FIFO Space” on page 53). Interrupt service latency will be increased for interrupts occurring while the CPU is stalled. The latency for these situations will be determined by the standard interrupt service procedure (as described above) and the amount of time the CPU is stalled.” on page 61); Timer 1 interrupts can be enabled by setting the ET1 bit in the IE register (Section “ Note that the CPU is stalled during EPROM write operations and USB FIFO MOVX accesses (see Section “10.2.3. Accessing USB FIFO Space” on page 53). Interrupt service latency will be increased for interrupts occurring while the CPU is stalled. The latency for these situations will be determined by the standard interrupt service procedure (as described above) and the amount of time the CPU is stalled.” on page 61). Both counter/timers operate in one of four primary modes selected by setting the Mode Select bits T1M1–T0M0 in the Counter/Timer Mode register (TMOD). Each timer can be configured independently. Each operating mode is described below.

23.1.1. Mode 0: 13-bit Counter/Timer

Timer 0 and Timer 1 operate as 13-bit counter/timers in Mode 0. The following describes the configuration and operation of Timer 0. However, both timers operate identically, and Timer 1 is configured in the same manner as described for Timer 0.

The TH0 register holds the eight MSBs of the 13-bit counter/timer. TL0 holds the five LSBs in bit positions TL0.4–TL0.0. The three upper bits of TL0 (TL0.7–TL0.5) are indeterminate and should be masked out or ignored when reading. As the 13-bit timer register increments and overflows from 0x1FFF (all ones) to 0x0000, the timer overflow flag TF0 in TCON is set and an interrupt will occur if Timer 0 interrupts are enabled.

The C/T0 bit in the TMOD register selects the counter/timer's clock source. When C/T0 is set to logic 1, high-to-low transitions at the selected Timer 0 input pin (T0) increment the timer register (Refer to Section “17.3. Priority Crossbar Decoder” on page 100 for information on selecting and configuring external I/O pins). Clearing C/T selects the clock defined by the T0M bit in register CKCON. When T0M is set, Timer 0 is clocked by the system clock. When T0M is cleared, Timer 0 is clocked by the source selected by the Clock Scale bits in CKCON (see SFR Definition 23.1).

Setting the TR0 bit (TCON.4) enables the timer when either GATE0 in the TMOD register is logic 0 or the input signal $\overline{\text{INT0}}$ is active as defined by bit IN0PL in register IT01CF (see SFR Definition 12.7). Setting GATE0 to 1 allows the timer to be controlled by the external input signal $\overline{\text{INT0}}$ (see Section “ Note that the CPU is stalled during EPROM write operations and USB FIFO MOVX accesses (see Section “10.2.3. Accessing USB FIFO Space” on page 53). Interrupt service latency will be increased for interrupts occurring while the CPU is stalled. The latency for these situations will be determined by the standard interrupt service procedure (as described above) and the amount of time the CPU is stalled.” on page 61), facilitating pulse width measurements

TR0	GATE0	$\overline{\text{INT0}}$	Counter/Timer
0	X	X	Disabled
1	0	X	Enabled
1	1	0	Disabled
1	1	1	Enabled
Note: X = Don't Care			

Setting TR0 does not force the timer to reset. The timer registers should be loaded with the desired initial value before the timer is enabled.

TL1 and TH1 form the 13-bit register for Timer 1 in the same manner as described above for TL0 and TH0. Timer 1 is configured and controlled using the relevant TCON and TMOD bits just as with Timer 0. The input signal $\overline{\text{INT1}}$ is used with Timer 1; the $\overline{\text{INT1}}$ polarity is defined by bit IN1PL in register IT01CF (see SFR Definition 12.7).

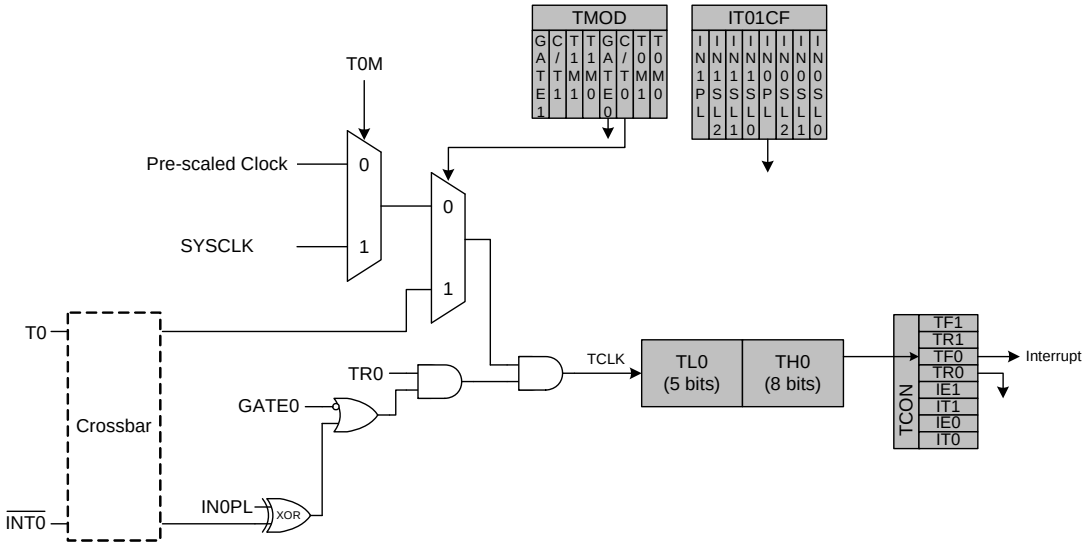

Figure 23.1. T0 Mode 0 Block Diagram

23.1.2. Mode 1: 16-bit Counter/Timer

Mode 1 operation is the same as Mode 0, except that the counter/timer registers use all 16 bits. The counter/timers are enabled and configured in Mode 1 in the same manner as for Mode 0.

23.1.3. Mode 2: 8-bit Counter/Timer with Auto-Reload

Mode 2 configures Timer 0 and Timer 1 to operate as 8-bit counter/timers with automatic reload of the start value. TL0 holds the count and TH0 holds the reload value. When the counter in TL0 overflows from all ones to 0x00, the timer overflow flag TF0 in the TCON register is set and the counter in TL0 is reloaded from TH0. If Timer 0 interrupts are enabled, an interrupt will occur when the TF0 flag is set. The reload value in TH0 is not changed. TL0 must be initialized to the desired value before enabling the timer for the first count to be correct. When in Mode 2, Timer 1 operates identically to Timer 0.

Both counter/timers are enabled and configured in Mode 2 in the same manner as Mode 0. Setting the TR0 bit (TCON.4) enables the timer when either GATE0 in the TMOD register is logic 0 or when the input signal $\overline{\text{INT0}}$ is active as defined by bit IN0PL in register IT01CF (see Section “12.3. $\overline{\text{INT0}}$ and $\overline{\text{INT1}}$ External Interrupt Sources” on page 69 for details on the external input signals $\overline{\text{INT0}}$ and $\overline{\text{INT1}}$).

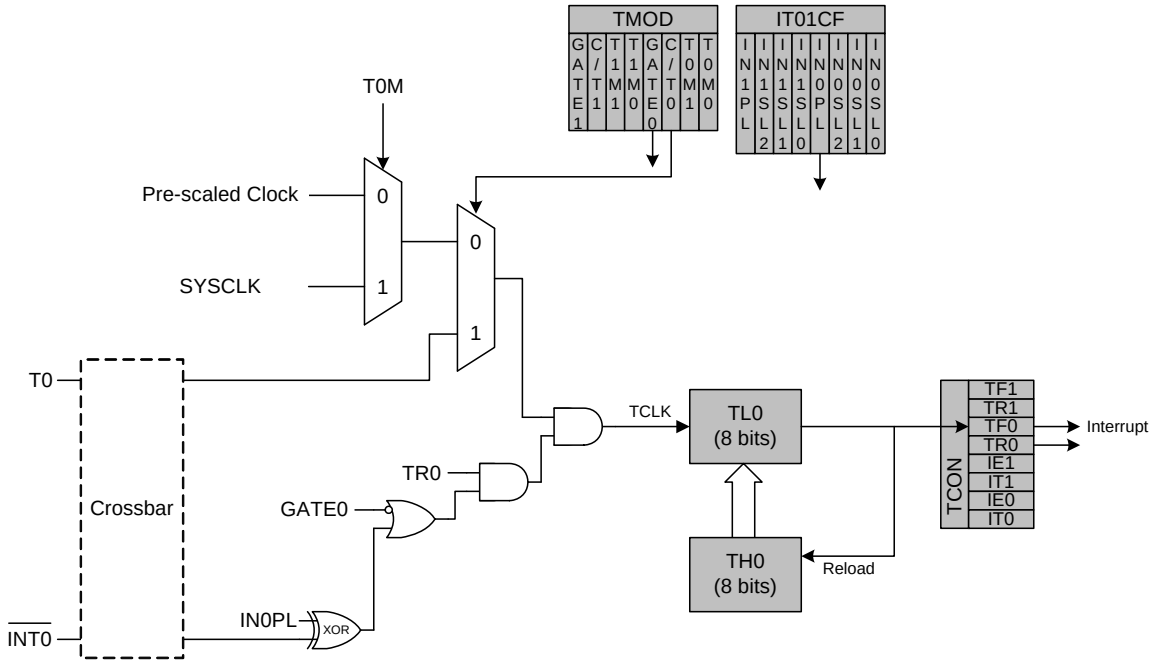

Figure 23.2. T0 Mode 2 Block Diagram

23.1.4. Mode 3: Two 8-bit Counter/Timers (Timer 0 Only)

In Mode 3, Timer 0 is configured as two separate 8-bit counter/timers held in TL0 and TH0. The counter/timer in TL0 is controlled using the Timer 0 control/status bits in TCON and TMOD: TR0, C/T0, GATE0 and TF0. TL0 can use either the system clock or an external input signal as its timebase. The TH0 register is restricted to a timer function sourced by the system clock or prescaled clock. TH0 is enabled using the Timer 1 run control bit TR1. TH0 sets the Timer 1 overflow flag TF1 on overflow and thus controls the Timer 1 interrupt.

Timer 1 is inactive in Mode 3. When Timer 0 is operating in Mode 3, Timer 1 can be operated in Modes 0, 1 or 2, but cannot be clocked by external signals nor set the TF1 flag and generate an interrupt. However, the Timer 1 overflow can be used to generate baud rates or overflow conditions for other peripherals. While Timer 0 is operating in Mode 3, Timer 1 run control is handled through its mode settings. To run Timer 1 while Timer 0 is in Mode 3, set the Timer 1 Mode as 0, 1, or 2. To disable Timer 1, configure it for Mode 3.

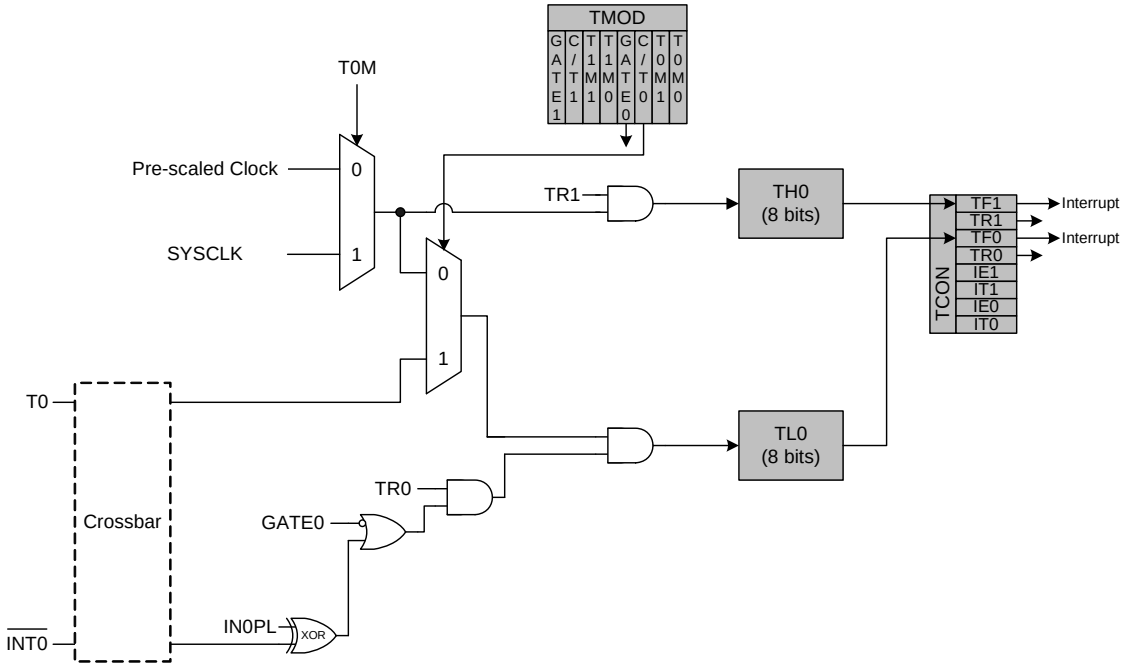

Figure 23.3. T0 Mode 3 Block Diagram

SFR Definition 23.2. TCON: Timer Control

Bit	7	6	5	4	3	2	1	0
Name	TF1	TR1	TF0	TR0	IE1	IT1	IE0	IT0
Type	R/W	R/W	R/W	R/W	R/W	R/W	R/W	R/W
Reset	0	0	0	0	0	0	0	0

SFR Address = 0x88; Bit-Addressable

Bit	Name	Function
7	TF1	**Timer 1 Overflow Flag.** Set to 1 by hardware when Timer 1 overflows. This flag can be cleared by software but is automatically cleared when the CPU vectors to the Timer 1 interrupt service routine.
6	TR1	**Timer 1 Run Control.** Timer 1 is enabled by setting this bit to 1.
5	TF0	**Timer 0 Overflow Flag.** Set to 1 by hardware when Timer 0 overflows. This flag can be cleared by software but is automatically cleared when the CPU vectors to the Timer 0 interrupt service routine.
4	TR0	**Timer 0 Run Control.** Timer 0 is enabled by setting this bit to 1.
3	IE1	**External Interrupt 1.** This flag is set by hardware when an edge/level of type defined by IT1 is detected. It can be cleared by software but is automatically cleared when the CPU vectors to the External Interrupt 1 service routine in edge-triggered mode.
2	IT1	**Interrupt 1 Type Select.** This bit selects whether the configured $\overline{\text{INT1}}$ interrupt will be edge or level sensitive. $\overline{\text{INT1}}$ is configured active low or high by the IN1PL bit in the IT01CF register (see SFR Definition 12.7). 0: $\overline{\text{INT1}}$ is level triggered. 1: $\overline{\text{INT1}}$ is edge triggered.
1	IE0	**External Interrupt 0.** This flag is set by hardware when an edge/level of type defined by IT1 is detected. It can be cleared by software but is automatically cleared when the CPU vectors to the External Interrupt 0 service routine in edge-triggered mode.
0	IT0	**Interrupt 0 Type Select.** This bit selects whether the configured $\overline{\text{INT0}}$ interrupt will be edge or level sensitive. $\overline{\text{INT0}}$ is configured active low or high by the IN0PL bit in register IT01CF (see SFR Definition 12.7). 0: $\overline{\text{INT0}}$ is level triggered. 1: $\overline{\text{INT0}}$ is edge triggered.

SFR Definition 23.3. TMOD: Timer Mode

Bit	7	6	5	4	3	2	1	0
Name	GATE1	C/T1	T1M[1:0]		GATE0	C/T0	T0M[1:0]	
Type	R/W	R/W	R/W		R/W	R/W	R/W	
Reset	0	0	0	0	0	0	0	0

SFR Address = 0x89

Bit	Name	Function
7	GATE1	**Timer 1 Gate Control.** 0: Timer 1 enabled when TR1 = 1 irrespective of $\overline{\text{INT1}}$ logic level. 1: Timer 1 enabled only when TR1 = 1 AND $\overline{\text{INT1}}$ is active as defined by bit IN1PL in register IT01CF (see SFR Definition 12.7).
6	C/T1	**Counter/Timer 1 Select.** 0: Timer: Timer 1 incremented by clock defined by T1M bit in register CKCON. 1: Counter: Timer 1 incremented by high-to-low transitions on external pin (T1).
5:4	T1M[1:0]	**Timer 1 Mode Select.** These bits select the Timer 1 operation mode. 00: Mode 0, 13-bit Counter/Timer 01: Mode 1, 16-bit Counter/Timer 10: Mode 2, 8-bit Counter/Timer with Auto-Reload 11: Mode 3, Timer 1 Inactive
3	GATE0	**Timer 0 Gate Control.** 0: Timer 0 enabled when TR0 = 1 irrespective of $\overline{\text{INT0}}$ logic level. 1: Timer 0 enabled only when TR0 = 1 AND $\overline{\text{INT0}}$ is active as defined by bit IN0PL in register IT01CF (see SFR Definition 12.7).
2	C/T0	**Counter/Timer 0 Select.** 0: Timer: Timer 0 incremented by clock defined by T0M bit in register CKCON. 1: Counter: Timer 0 incremented by high-to-low transitions on external pin (T0).
1:0	T0M[1:0]	**Timer 0 Mode Select.** These bits select the Timer 0 operation mode. 00: Mode 0, 13-bit Counter/Timer 01: Mode 1, 16-bit Counter/Timer 10: Mode 2, 8-bit Counter/Timer with Auto-Reload 11: Mode 3, Two 8-bit Counter/Timers

SFR Definition 23.4. TL0: Timer 0 Low Byte

Bit	7	6	5	4	3	2	1	0
Name	TL0[7:0]							
Type	R/W							
Reset	0	0	0	0	0	0	0	0

SFR Address = 0x8A

Bit	Name	Function
7:0	TL0[7:0]	**Timer 0 Low Byte.** The TL0 register is the low byte of the 16-bit Timer 0.

SFR Definition 23.5. TL1: Timer 1 Low Byte

Bit	7	6	5	4	3	2	1	0
Name	TL1[7:0]							
Type	R/W							
Reset	0	0	0	0	0	0	0	0

SFR Address = 0x8B

Bit	Name	Function
7:0	TL1[7:0]	**Timer 1 Low Byte.** The TL1 register is the low byte of the 16-bit Timer 1.

SFR Definition 23.6. TH0: Timer 0 High Byte

Bit	7	6	5	4	3	2	1	0
Name	TH0[7:0]							
Type	R/W							
Reset	0	0	0	0	0	0	0	0

SFR Address = 0x8C

Bit	Name	Function
7:0	TH0[7:0]	**Timer 0 High Byte.** The TH0 register is the high byte of the 16-bit Timer 0.

SFR Definition 23.7. TH1: Timer 1 High Byte

Bit	7	6	5	4	3	2	1	0
Name	TH1[7:0]							
Type	R/W							
Reset	0	0	0	0	0	0	0	0

SFR Address = 0x8D

Bit	Name	Function
7:0	TH1[7:0]	**Timer 1 High Byte.** The TH1 register is the high byte of the 16-bit Timer 1.

23.2. Timer 2

Timer 2 is a 16-bit timer formed by two 8-bit SFRs: TMR2L (low byte) and TMR2H (high byte). Timer 2 may operate in 16-bit auto-reload mode or (split) 8-bit auto-reload mode. The T2SPLIT bit (TMR2CN.3) defines the Timer 2 operation mode.

Timer 2 may be clocked by the system clock, the system clock divided by 12, or the external oscillator source divided by 8. The external clock mode is ideal for real-time clock (RTC) functionality, where the internal oscillator drives the system clock while Timer 2 (and/or the PCA) is clocked by an external precision oscillator. Note that the external oscillator source divided by 8 is synchronized with the system clock.

23.2.1. 16-bit Timer with Auto-Reload

When T2SPLIT (TMR2CN.3) is zero, Timer 2 operates as a 16-bit timer with auto-reload. Timer 2 can be clocked by SYSCLK, SYSCLK divided by 12, or the external oscillator clock source divided by 8. As the 16-bit timer register increments and overflows from 0xFFFF to 0x0000, the 16-bit value in the Timer 2 reload registers (TMR2RLH and TMR2RLL) is loaded into the Timer 2 register as shown in Figure 23.4, and the Timer 2 High Byte Overflow Flag (TMR2CN.7) is set. If Timer 2 interrupts are enabled (if IE.5 is set), an interrupt will be generated on each Timer 2 overflow. Additionally, if Timer 2 interrupts are enabled and the TF2LEN bit is set (TMR2CN.5), an interrupt will be generated each time the lower 8 bits (TMR2L) overflow from 0xFF to 0x00.

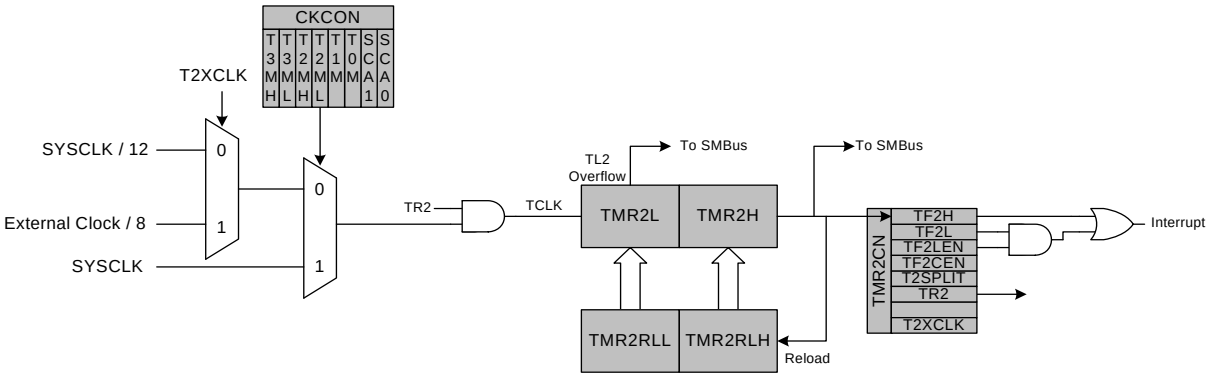

Figure 23.4. Timer 2 16-Bit Mode Block Diagram

23.2.2. 8-bit Timers with Auto-Reload

When T2SPLIT is set, Timer 2 operates as two 8-bit timers (TMR2H and TMR2L). Both 8-bit timers operate in auto-reload mode as shown in Figure 23.5. TMR2RLL holds the reload value for TMR2L; TMR2RLH holds the reload value for TMR2H. The TR2 bit in TMR2CN handles the run control for TMR2H. TMR2L is always running when configured for 8-bit Mode.

Each 8-bit timer may be configured to use SYSCLK, SYSCLK divided by 12, or the external oscillator clock source divided by 8. The Timer 2 Clock Select bits (T2MH and T2ML in CKCON) select either SYSCLK or the clock defined by the Timer 2 External Clock Select bit (T2XCLK in TMR2CN), as follows:

T2MH	T2XCLK	TMR2H Clock Source
0	0	SYSCLK / 12
0	1	External Clock / 8
1	X	SYSCLK

T2ML	T2XCLK	TMR2L Clock Source
0	0	SYSCLK / 12
0	1	External Clock / 8
1	X	SYSCLK

The TF2H bit is set when TMR2H overflows from 0xFF to 0x00; the TF2L bit is set when TMR2L overflows from 0xFF to 0x00. When Timer 2 interrupts are enabled (IE.5), an interrupt is generated each time TMR2H overflows. If Timer 2 interrupts are enabled and TF2LEN (TMR2CN.5) is set, an interrupt is generated each time either TMR2L or TMR2H overflows. When TF2LEN is enabled, software must check the TF2H and TF2L flags to determine the source of the Timer 2 interrupt. The TF2H and TF2L interrupt flags are not cleared by hardware and must be manually cleared by software.

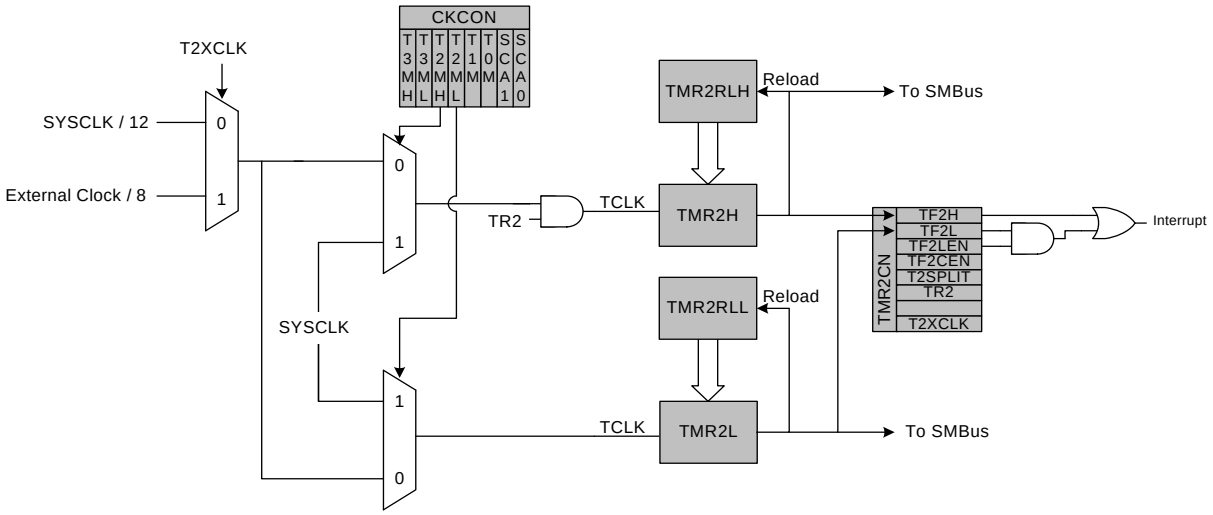

Figure 23.5. Timer 2 8-Bit Mode Block Diagram

23.2.3. Low-Frequency Oscillator (LFO) Capture Mode

The Low-Frequency Oscillator Capture Mode allows the LFO clock to be measured against the system clock or an external oscillator source. Timer 2 can be clocked from the system clock, the system clock divided by 12, or the external oscillator divided by 8, depending on the T2ML (CKCON.4), and T2XCLK settings.

Setting TF2CEN to 1 enables the LFO Capture Mode for Timer 2. In this mode, T2SPLIT should be set to 0, as the full 16-bit timer is used. Upon a falling edge of the low-frequency oscillator, the contents of Timer 2 (TMR2H:TMR2L) are loaded into the Timer 2 reload registers (TMR2RLH:TMR2RLL) and the TF2H flag is set. By recording the difference between two successive timer capture values, the LFO clock frequency can be determined with respect to the Timer 2 clock. The Timer 2 clock should be much faster than the LFO to achieve an accurate reading.

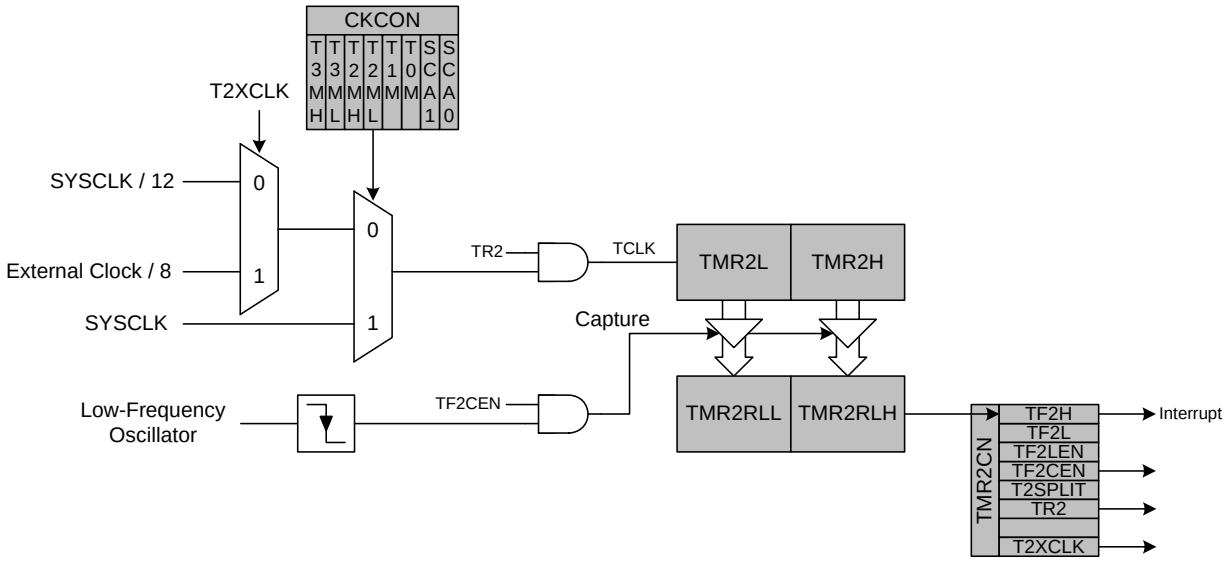

Figure 23.6. Timer 2 Low-Frequency Oscillation Capture Mode Block Diagram

SFR Definition 23.8. TMR2CN: Timer 2 Control

Bit	7	6	5	4	3	2	1	0
Name	TF2H	TF2L	TF2LEN	TF2CEN	T2SPLIT	TR2		T2XCLK
Type	R/W	R/W	R/W	R/W	R/W	R/W	R	R/W
Reset	0	0	0	0	0	0	0	0

SFR Address = 0xC8; Bit-Addressable

Bit	Name	Function
7	TF2H	**Timer 2 High Byte Overflow Flag.** Set by hardware when the Timer 2 high byte overflows from 0xFF to 0x00. In 16 bit mode, this will occur when Timer 2 overflows from 0xFFFF to 0x0000. When the Timer 2 interrupt is enabled, setting this bit causes the CPU to vector to the Timer 2 interrupt service routine. This bit is not automatically cleared by hardware.
6	TF2L	**Timer 2 Low Byte Overflow Flag.** Set by hardware when the Timer 2 low byte overflows from 0xFF to 0x00. TF2L will be set when the low byte overflows regardless of the Timer 2 mode. This bit is not automatically cleared by hardware.
5	TF2LEN	**Timer 2 Low Byte Interrupt Enable.** When set to 1, this bit enables Timer 2 Low Byte interrupts. If Timer 2 interrupts are also enabled, an interrupt will be generated when the low byte of Timer 2 overflows.
4	TF2CEN	**Timer 2 Low-Frequency Oscillator Capture Enable.** When set to 1, this bit enables Timer 2 Low-Frequency Oscillator Capture Mode. If TF2CEN is set and Timer 2 interrupts are enabled, an interrupt will be generated on a falling edge of the low-frequency oscillator output, and the current 16-bit timer value in TMR2H:TMR2L will be copied to TMR2RLH:TMR2RLL.
3	T2SPLIT	**Timer 2 Split Mode Enable.** When this bit is set, Timer 2 operates as two 8-bit timers with auto-reload. 0: Timer 2 operates in 16-bit auto-reload mode. 1: Timer 2 operates as two 8-bit auto-reload timers.
2	TR2	**Timer 2 Run Control.** Timer 2 is enabled by setting this bit to 1. In 8-bit mode, this bit enables/disables TMR2H only; TMR2L is always enabled in split mode.
1	Unused	Unused. Read = 0b; Write = Don’t Care
0	T2XCLK	**Timer 2 External Clock Select.** This bit selects the external clock source for Timer 2. If Timer 2 is in 8-bit mode, this bit selects the external oscillator clock source for both timer bytes. However, the Timer 2 Clock Select bits (T2MH and T2ML in register CKCON) may still be used to select between the external clock and the system clock for either timer. 0: Timer 2 clock is the system clock divided by 12. 1: Timer 2 clock is the external clock divided by 8 (synchronized with SYSCLK).

SFR Definition 23.9. TMR2RLL: Timer 2 Reload Register Low Byte

Bit	7	6	5	4	3	2	1	0
Name	TMR2RLL[7:0]							
Type	R/W							
Reset	0	0	0	0	0	0	0	0

SFR Address = 0xCA

Bit	Name	Function
7:0	TMR2RLL[7:0]	**Timer 2 Reload Register Low Byte.** TMR2RLL holds the low byte of the reload value for Timer 2.

SFR Definition 23.10. TMR2RLH: Timer 2 Reload Register High Byte

Bit	7	6	5	4	3	2	1	0
Name	TMR2RLH[7:0]							
Type	R/W							
Reset	0	0	0	0	0	0	0	0

SFR Address = 0xCB

Bit	Name	Function
7:0	TMR2RLH[7:0]	**Timer 2 Reload Register High Byte.** TMR2RLH holds the high byte of the reload value for Timer 2.

SFR Definition 23.11. TMR2L: Timer 2 Low Byte

Bit	7	6	5	4	3	2	1	0
Name	TMR2L[7:0]							
Type	R/W							
Reset	0	0	0	0	0	0	0	0

SFR Address = 0xCC

Bit	Name	Function
7:0	TMR2L[7:0]	**Timer 2 Low Byte.** In 16-bit mode, the TMR2L register contains the low byte of the 16-bit Timer 2. In 8-bit mode, TMR2L contains the 8-bit low byte timer value.

SFR Definition 23.12. TMR2H Timer 2 High Byte

Bit	7	6	5	4	3	2	1	0
Name	TMR2H[7:0]							
Type	R/W							
Reset	0	0	0	0	0	0	0	0

SFR Address = 0xCD

Bit	Name	Function
7:0	TMR2H[7:0]	**Timer 2 Low Byte.** In 16-bit mode, the TMR2H register contains the high byte of the 16-bit Timer 2. In 8-bit mode, TMR2H contains the 8-bit high byte timer value.

23.3. Timer 3

Timer 3 is a 16-bit timer formed by two 8-bit SFRs: TMR3L (low byte) and TMR3H (high byte). Timer 3 may operate in 16-bit auto-reload mode or (split) 8-bit auto-reload mode. The T3SPLIT bit (TMR3CN.3) defines the Timer 3 operation mode.

Timer 3 may be clocked by the system clock, the system clock divided by 12, the external oscillator source divided by 8, or the internal low-frequency oscillator divided by 8. The external clock mode is ideal for real-time clock (RTC) functionality, where the internal high-frequency oscillator drives the system clock while Timer 3 is clocked by an external oscillator source. Note that the external oscillator source divided by 8 and the LFO source divided by 8 are synchronized with the system clock when in all operating modes except suspend. When the internal oscillator is placed in suspend mode, The external clock/8 signal or the LFO/8 output can directly drive the timer. This allows the use of an external clock or the LFO to wake up the device from suspend mode. The timer will continue to run in suspend mode and count up. When the timer overflow occurs, the device will wake from suspend mode, and begin executing code again. The timer value may be set prior to entering suspend, to overflow in the desired amount of time (number of clocks) to wake the device. If a wake-up source other than the timer wakes the device from suspend mode, it may take up to three timer clocks before the timer registers can be read or written. During this time, the STSYNC bit in register OSCICN will be set to 1, to indicate that it is not safe to read or write the timer registers.

Important Note: In internal LFO/8 mode, the divider for the internal LFO must be set to 1 for proper functionality. The timer will not operate if the LFO divider is not set to 1.

23.3.1. 16-bit Timer with Auto-Reload

When T3SPLIT (TMR3CN.3) is zero, Timer 3 operates as a 16-bit timer with auto-reload. Timer 3 can be clocked by SYSCLK, SYSCLK divided by 12, or the external oscillator clock source divided by 8. As the 16-bit timer register increments and overflows from 0xFFFF to 0x0000, the 16-bit value in the Timer 3 reload registers (TMR3RLH and TMR3RLL) is loaded into the Timer 3 register as shown in Figure 23.7, and the Timer 3 High Byte Overflow Flag (TMR3CN.7) is set. If Timer 3 interrupts are enabled (if EIE1.7 is set), an interrupt will be generated on each Timer 3 overflow. Additionally, if Timer 3 interrupts are enabled and the TF3LEN bit is set (TMR3CN.5), an interrupt will be generated each time the lower 8 bits (TMR3L) overflow from 0xFF to 0x00.

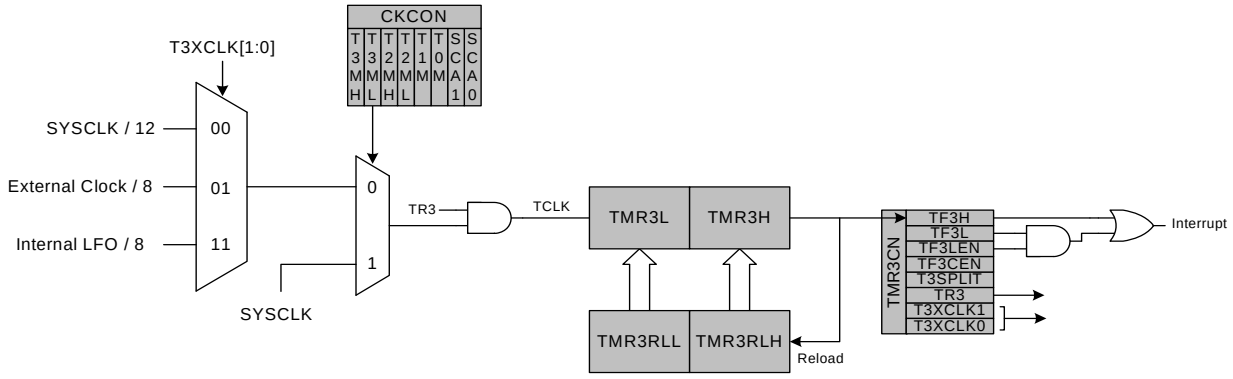

Figure 23.7. Timer 3 16-Bit Mode Block Diagram

23.3.2. 8-bit Timers with Auto-Reload

When T3SPLIT is set, Timer 3 operates as two 8-bit timers (TMR3H and TMR3L). Both 8-bit timers operate in auto-reload mode as shown in Figure 23.8. TMR3RLL holds the reload value for TMR3L; TMR3RLH holds the reload value for TMR3H. The TR3 bit in TMR3CN handles the run control for TMR3H. TMR3L is always running when configured for 8-bit Mode.

Each 8-bit timer may be configured to use SYSCLK, SYSCLK divided by 12, the external oscillator clock source divided by 8, or the internal Low-frequency Oscillator. The Timer 3 Clock Select bits (T3MH and T3ML in CKCON) select either SYSCLK or the clock defined by the Timer 3 External Clock Select bits (T3XCLK[1:0] in TMR3CN), as follows:

T3MH	T3XCLK[1:0]	TMR3H Clock Source
0	00	SYSCLK / 12
0	01	External Clock / 8
0	10	Reserved
0	11	Internal LFO
1	X	SYSCLK

T3ML	T3XCLK[1:0]	TMR3L Clock Source
0	00	SYSCLK / 12
0	01	External Clock / 8
0	10	Reserved
0	11	Internal LFO
1	X	SYSCLK

The TF3H bit is set when TMR3H overflows from 0xFF to 0x00; the TF3L bit is set when TMR3L overflows from 0xFF to 0x00. When Timer 3 interrupts are enabled, an interrupt is generated each time TMR3H overflows. If Timer 3 interrupts are enabled and TF3LEN (TMR3CN.5) is set, an interrupt is generated each time either TMR3L or TMR3H overflows. When TF3LEN is enabled, software must check the TF3H and TF3L flags to determine the source of the Timer 3 interrupt. The TF3H and TF3L interrupt flags are not cleared by hardware and must be manually cleared by software.

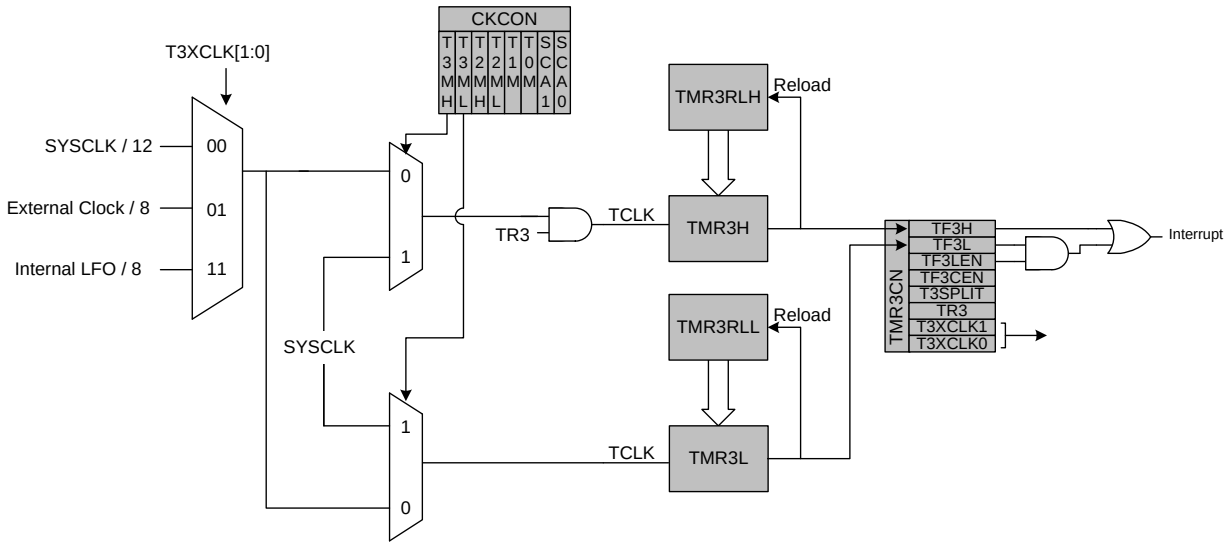

Figure 23.8. Timer 3 8-Bit Mode Block Diagram

23.3.3. Low-Frequency Oscillator (LFO) Capture Mode

The Low-Frequency Oscillator Capture Mode allows the LFO clock to be measured against the system clock or an external oscillator source. Timer 3 can be clocked from the system clock, the system clock divided by 12, or the external oscillator divided by 8, depending on the T3ML (CKCON.6), and T3XCLK[1:0] settings.

Setting TF3CEN to 1 enables the LFO Capture Mode for Timer 3. In this mode, T3SPLIT should be set to 0, as the full 16-bit timer is used. Upon a falling edge of the low-frequency oscillator, the contents of Timer 3 (TMR3H:TMR3L) are loaded into the Timer 3 reload registers (TMR3RLH:TMR3RLL) and the TF3H flag is set. By recording the difference between two successive timer capture values, the LFO clock frequency can be determined with respect to the Timer 3 clock. The Timer 3 clock should be much faster than the LFO to achieve an accurate reading. This means that the LFO/8 should not be selected as the timer clock source in this mode.

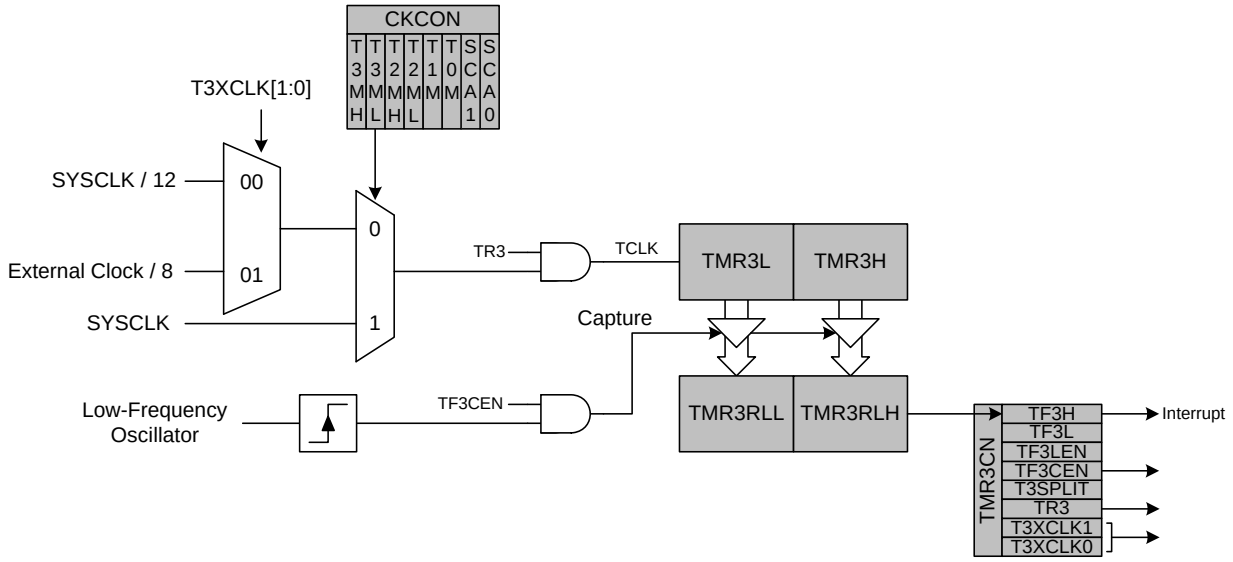

Figure 23.9. Timer 3 Low-Frequency Oscillation Capture Mode Block Diagram

SFR Definition 23.13. TMR3CN: Timer 3 Control

Bit	7	6	5	4	3	2	1	0
Name	TF3H	TF3L	TF3LEN	TF3CEN	T3SPLIT	TR3	T3XCLK[1:0]	
Type	R/W	R/W	R/W	R/W	R/W	R/W	R/W	
Reset	0	0	0	0	0	0	0	0

SFR Address = 0x91

Bit	Name	Function
7	TF3H	**Timer 3 High Byte Overflow Flag.** Set by hardware when the Timer 3 high byte overflows from 0xFF to 0x00. In 16 bit mode, this will occur when Timer 3 overflows from 0xFFFF to 0x0000. When the Timer 3 interrupt is enabled, setting this bit causes the CPU to vector to the Timer 3 interrupt service routine. This bit is not automatically cleared by hardware.
6	TF3L	**Timer 3 Low Byte Overflow Flag.** Set by hardware when the Timer 3 low byte overflows from 0xFF to 0x00. TF3L will be set when the low byte overflows regardless of the Timer 3 mode. This bit is not automatically cleared by hardware.
5	TF3LEN	**Timer 3 Low Byte Interrupt Enable.** When set to 1, this bit enables Timer 3 Low Byte interrupts. If Timer 3 interrupts are also enabled, an interrupt will be generated when the low byte of Timer 3 overflows.
4	TF3CEN	**Timer 3 Low-Frequency Oscillator Capture Enable.** When set to 1, this bit enables Timer 3 Low-Frequency Oscillator Capture Mode. If TF3CEN is set and Timer 3 interrupts are enabled, an interrupt will be generated on a falling edge of the low-frequency oscillator output, and the current 16-bit timer value in TMR3H:TMR3L will be copied to TMR3RLH:TMR3RLL.
3	T3SPLIT	**Timer 3 Split Mode Enable.** When this bit is set, Timer 3 operates as two 8-bit timers with auto-reload. 0: Timer 3 operates in 16-bit auto-reload mode. 1: Timer 3 operates as two 8-bit auto-reload timers.
2	TR3	**Timer 3 Run Control.** Timer 3 is enabled by setting this bit to 1. In 8-bit mode, this bit enables/disables TMR3H only; TMR3L is always enabled in split mode.
1:0	T3XCLK[1:0]	**Timer 3 External Clock Select.** This bit selects the “external” clock source for Timer 3. If Timer 3 is in 8-bit mode, this bit selects the external oscillator clock source for both timer bytes. However, the Timer 3 Clock Select bits (T3MH and T3ML in register CKCON) may still be used to select between the external clock and the system clock for either timer. 00: System clock divided by 12. 01: External clock divided by 8 (synchronized with SYSCLK when not in suspend). 10: Reserved. 11: Internal LFO/8 (synchronized with SYSCLK when not in suspend).

SFR Definition 23.14. TMR3RLL: Timer 3 Reload Register Low Byte

Bit	7	6	5	4	3	2	1	0
Name	TMR3RLL[7:0]							
Type	R/W							
Reset	0	0	0	0	0	0	0	0

SFR Address = 0x92

Bit	Name	Function
7:0	TMR3RLL[7:0]	**Timer 3 Reload Register Low Byte.** TMR3RLL holds the low byte of the reload value for Timer 3.

SFR Definition 23.15. TMR3RLH: Timer 3 Reload Register High Byte

Bit	7	6	5	4	3	2	1	0
Name	TMR3RLH[7:0]							
Type	R/W							
Reset	0	0	0	0	0	0	0	0

SFR Address = 0x93

Bit	Name	Function
7:0	TMR3RLH[7:0]	**Timer 3 Reload Register High Byte.** TMR3RLH holds the high byte of the reload value for Timer 3.

SFR Definition 23.16. TMR3L: Timer 3 Low Byte

Bit	7	6	5	4	3	2	1	0
Name	TMR3L[7:0]							
Type	R/W							
Reset	0	0	0	0	0	0	0	0

SFR Address = 0x94

Bit	Name	Function
7:0	TMR3L[7:0]	**Timer 3 Low Byte.** In 16-bit mode, the TMR3L register contains the low byte of the 16-bit Timer 3. In 8-bit mode, TMR3L contains the 8-bit low byte timer value.

SFR Definition 23.17. TMR3H Timer 3 High Byte

Bit	7	6	5	4	3	2	1	0
Name	TMR3H[7:0]							
Type	R/W							
Reset	0	0	0	0	0	0	0	0

SFR Address = 0x95

Bit	Name	Function
7:0	TMR3H[7:0]	**Timer 3 High Byte.** In 16-bit mode, the TMR3H register contains the high byte of the 16-bit Timer 3. In 8-bit mode, TMR3H contains the 8-bit high byte timer value.

24. Programmable Counter Array

The Programmable Counter Array (PCA0) provides enhanced timer functionality while requiring less CPU intervention than the standard 8051 counter/timers. The PCA consists of a dedicated 16-bit counter/timer and three 16-bit capture/compare modules. Each capture/compare module has its own associated I/O line (CEXn) which is routed through the Crossbar to Port I/O when enabled. The counter/timer is driven by a programmable timebase that can select between six sources: system clock, system clock divided by four, system clock divided by twelve, the external oscillator clock source divided by 8, Timer 0 overflows, or an external clock signal on the ECI input pin. Each capture/compare module may be configured to operate independently in one of six modes: Edge-Triggered Capture, Software Timer, High-Speed Output, Frequency Output, 8 to 11-Bit PWM, or 16-Bit PWM (each mode is described in Section "24.3. Capture/Compare Modules" on page 227). The external oscillator clock option is ideal for real-time clock (RTC) functionality, allowing the PCA to be clocked by a precision external oscillator while the internal oscillator drives the system clock. The PCA is configured and controlled through the system controller's Special Function Registers. The PCA block diagram is shown in Figure 24.1.

Important Note: The PCA Module 2 may be used as a watchdog timer (WDT), and is enabled in this mode following a system reset. **Access to certain PCA registers is restricted while WDT mode is enabled**. See Section 24.4 for details.

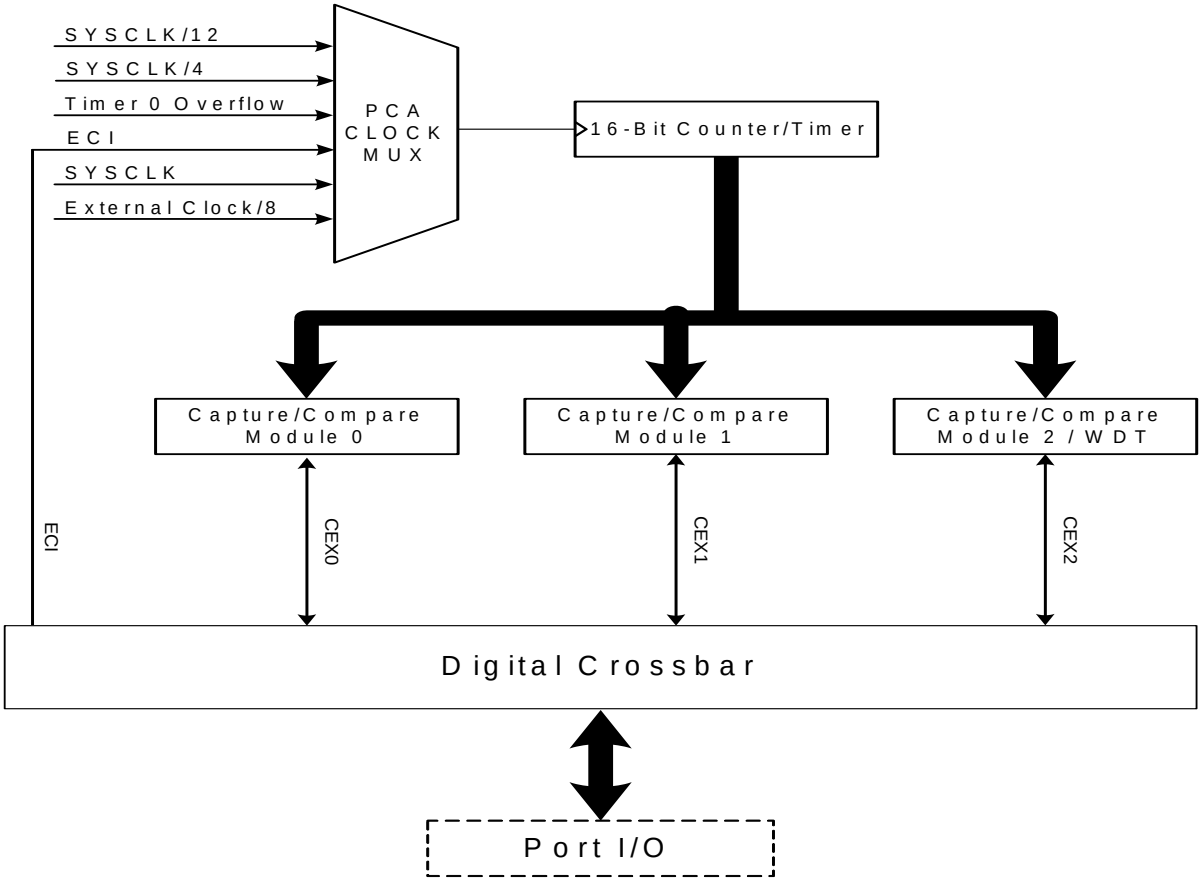

Figure 24.1. PCA Block Diagram

24.1. PCA Counter/Timer

The 16-bit PCA counter/timer consists of two 8-bit SFRs: PCA0L and PCA0H. PCA0H is the high byte (MSB) of the 16-bit counter/timer and PCA0L is the low byte (LSB). Reading PCA0L automatically latches the value of PCA0H into a “snapshot” register; the following PCA0H read accesses this “snapshot” register. **Reading the PCA0L Register first guarantees an accurate reading of the entire 16-bit PCA0 counter.** Reading PCA0H or PCA0L does not disturb the counter operation. The CPS2–CPS0 bits in the PCA0MD register select the timebase for the counter/timer as shown in Table 24.1.

When the counter/timer overflows from 0xFFFF to 0x0000, the Counter Overflow Flag (CF) in PCA0MD is set to logic 1 and an interrupt request is generated if CF interrupts are enabled. Setting the ECF bit in PCA0MD to logic 1 enables the CF flag to generate an interrupt request. The CF bit is not automatically cleared by hardware when the CPU vectors to the interrupt service routine, and must be cleared by software. Clearing the CIDL bit in the PCA0MD register allows the PCA to continue normal operation while the CPU is in Idle mode.

Table 24.1. PCA Timebase Input Options

CPS2	CPS1	CPS0	Timebase
0	0	0	System clock divided by 12
0	0	1	System clock divided by 4
0	1	0	Timer 0 overflow
0	1	1	High-to-low transitions on ECI (max rate = system clock divided by 4)
1	0	0	System clock
1	0	1	External oscillator source divided by 8*
1	1	x	Reserved.
Note: External oscillator source divided by 8 is synchronized with the system clock.			

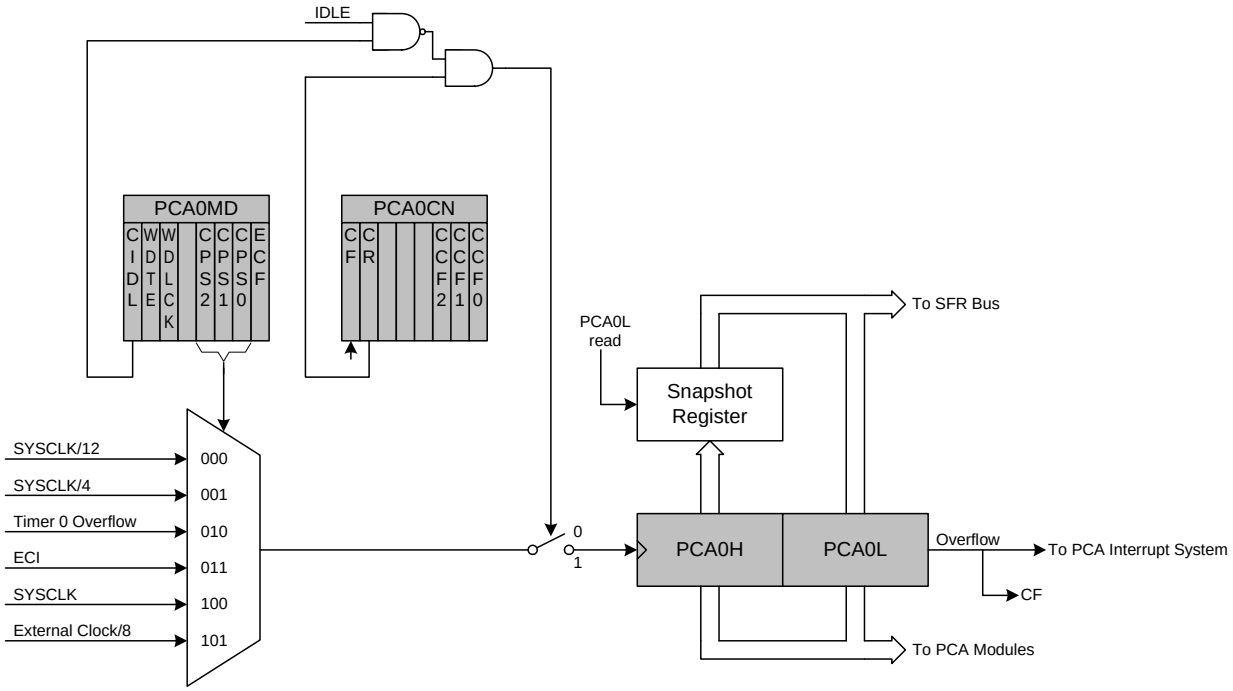

Figure 24.2. PCA Counter/Timer Block Diagram

24.2. PCA0 Interrupt Sources

Figure 24.3 shows a diagram of the PCA interrupt tree. There are five independent event flags that can be used to generate a PCA0 interrupt. They are: the main PCA counter overflow flag (CF), which is set upon a 16-bit overflow of the PCA0 counter, an intermediate overflow flag (COVF), which can be set on an overflow from the 8th, 9th, 10th, or 11th bit of the PCA0 counter, and the individual flags for each PCA channel (CCF0, CCF1, and CCF2), which are set according to the operation mode of that module. These event flags are always set when the trigger condition occurs. Each of these flags can be individually selected to generate a PCA0 interrupt, using the corresponding interrupt enable flag (ECF for CF, ECOV for COVF, and ECCFn for each CCFn). PCA0 interrupts must be globally enabled before any individual interrupt sources are recognized by the processor. PCA0 interrupts are globally enabled by setting the EA bit and the EPCA0 bit to logic 1.

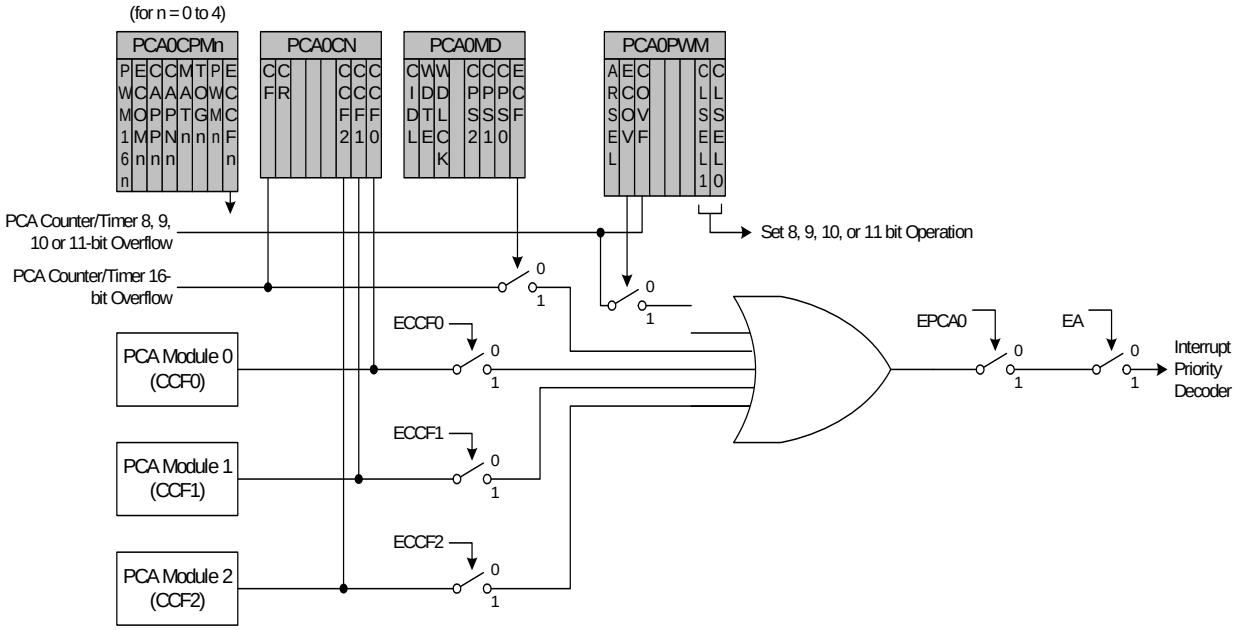

Figure 24.3. PCA Interrupt Block Diagram

24.3. Capture/Compare Modules

Each module can be configured to operate independently in one of six operation modes: Edge-triggered Capture, Software Timer, High Speed Output, Frequency Output, 8 to 11-Bit Pulse Width Modulator, or 16-Bit Pulse Width Modulator. Each module has Special Function Registers (SFRs) associated with it in the CIP-51 system controller. These registers are used to exchange data with a module and configure the module's mode of operation. Table 24.2 summarizes the bit settings in the PCA0CPMn and PCA0PWM registers used to select the PCA capture/compare module's operating mode. Note that all modules set to use 8, 9, 10, or 11-bit PWM mode must use the same cycle length (8-11 bits). Setting the ECCFn bit in a PCA0CPMn register enables the module's CCFn interrupt.

Table 24.2. PCA0CPM and PCA0PWM Bit Settings for PCA Capture/Compare Modules

Operational Mode	PCA0CPMn								PCA0PWM				
Bit Number	7	6	5	4	3	2	1	0	7	6	5	4-2	1-0
Capture triggered by positive edge on CEXn	X	X	1	0	0	0	0	A	0	X	B	XXX	XX
Capture triggered by negative edge on CEXn	X	X	0	1	0	0	0	A	0	X	B	XXX	XX
Capture triggered by any transition on CEXn	X	X	1	1	0	0	0	A	0	X	B	XXX	XX
Software Timer	X	C	0	0	1	0	0	A	0	X	B	XXX	XX
High Speed Output	X	C	0	0	1	1	0	A	0	X	B	XXX	XX
Frequency Output	X	C	0	0	0	1	1	A	0	X	B	XXX	XX
8-Bit Pulse Width Modulator (Note 7)	0	C	0	0	E	0	1	A	0	X	B	XXX	00
9-Bit Pulse Width Modulator (Note 7)	0	C	0	0	E	0	1	A	D	X	B	XXX	01
10-Bit Pulse Width Modulator (Note 7)	0	C	0	0	E	0	1	A	D	X	B	XXX	10
11-Bit Pulse Width Modulator (Note 7)	0	C	0	0	E	0	1	A	D	X	B	XXX	11
16-Bit Pulse Width Modulator	1	C	0	0	E	0	1	A	0	X	B	XXX	XX

1. X = Don’t Care (no functional difference for individual module if 1 or 0).
2. A = Enable interrupts for this module (PCA interrupt triggered on CCFn set to 1).
3. B = Enable 8th, 9th, 10th or 11th bit overflow interrupt (Depends on setting of CLSEL[1:0]).
4. C = When set to 0, the digital comparator is off. For high speed and frequency output modes, the associated pin will not toggle. In any of the PWM modes, this generates a 0% duty cycle (output = 0).
5. D = Selects whether the Capture/Compare register (0) or the Auto-Reload register (1) for the associated channel is accessed via addresses PCA0CPHn and PCA0CPLn.
6. E = When set, a match event will cause the CCFn flag for the associated channel to be set.
7. All modules set to 8, 9, 10 or 11-bit PWM mode use the same cycle length setting.

24.3.1. Edge-triggered Capture Mode

In this mode, a valid transition on the CEXn pin causes the PCA to capture the value of the PCA counter/timer and load it into the corresponding module's 16-bit capture/compare register (PCA0CPLn and PCA0CPHn). The CAPPn and CAPNn bits in the PCA0CPMn register are used to select the type of transition that triggers the capture: low-to-high transition (positive edge), high-to-low transition (negative edge), or either transition (positive or negative edge). When a capture occurs, the Capture/Compare Flag (CCFn) in PCA0CN is set to logic 1. An interrupt request is generated if the CCFn interrupt for that module is enabled. The CCFn bit is not automatically cleared by hardware when the CPU vectors to the interrupt service routine, and must be cleared by software. If both CAPPn and CAPNn bits are set to logic 1, then the state of the Port pin associated with CEXn can be read directly to determine whether a rising-edge or falling-edge caused the capture.

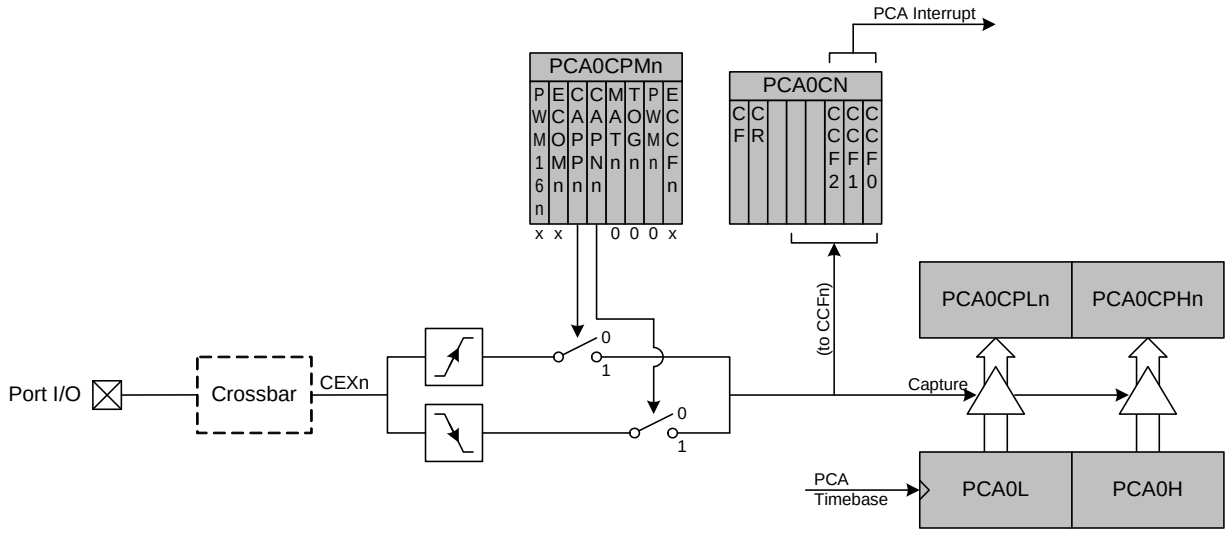

Figure 24.4. PCA Capture Mode Diagram

Note: The CEXn input signal must remain high or low for at least 2 system clock cycles to be recognized by the hardware.

24.3.2. Software Timer (Compare) Mode

In Software Timer mode, the PCA counter/timer value is compared to the module's 16-bit capture/compare register (PCA0CPHn and PCA0CPLn). When a match occurs, the Capture/Compare Flag (CCFn) in PCA0CN is set to logic 1. An interrupt request is generated if the CCFn interrupt for that module is enabled. The CCFn bit is not automatically cleared by hardware when the CPU vectors to the interrupt service routine, and must be cleared by software. Setting the ECOMn and MATn bits in the PCA0CPMn register enables Software Timer mode.

Important Note About Capture/Compare Registers: When writing a 16-bit value to the PCA0 Capture/Compare registers, the low byte should always be written first. Writing to PCA0CPLn clears the ECOMn bit to 0; writing to PCA0CPHn sets ECOMn to 1.

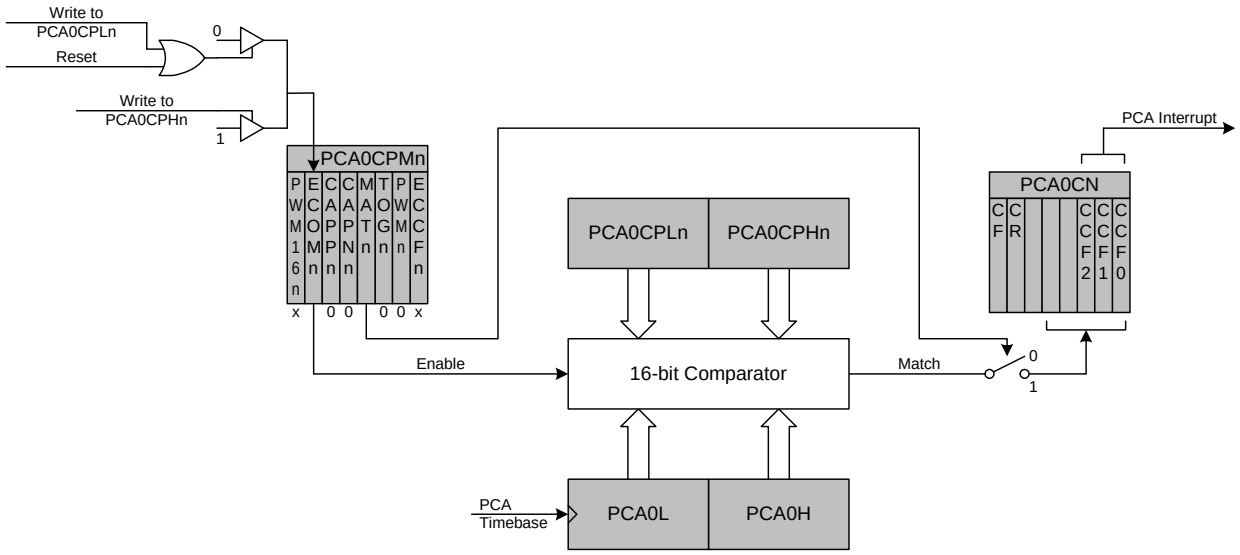

Figure 24.5. PCA Software Timer Mode Diagram

24.3.3. High-Speed Output Mode

In High-Speed Output mode, a module's associated CEXn pin is toggled each time a match occurs between the PCA Counter and the module's 16-bit capture/compare register (PCA0CPHn and PCA0CPLn). When a match occurs, the Capture/Compare Flag (CCFn) in PCA0CN is set to logic 1. An interrupt request is generated if the CCFn interrupt for that module is enabled. The CCFn bit is not automatically cleared by hardware when the CPU vectors to the interrupt service routine, and must be cleared by software. Setting the TOGn, MATn, and ECOMn bits in the PCA0CPMn register enables the High-Speed Output mode. If ECOMn is cleared, the associated pin will retain its state, and not toggle on the next match event.

I**mportant Note About Capture/Compare Registers**: When writing a 16-bit value to the PCA0 Capture/Compare registers, the low byte should always be written first. Writing to PCA0CPLn clears the ECOMn bit to 0; writing to PCA0CPHn sets ECOMn to 1.

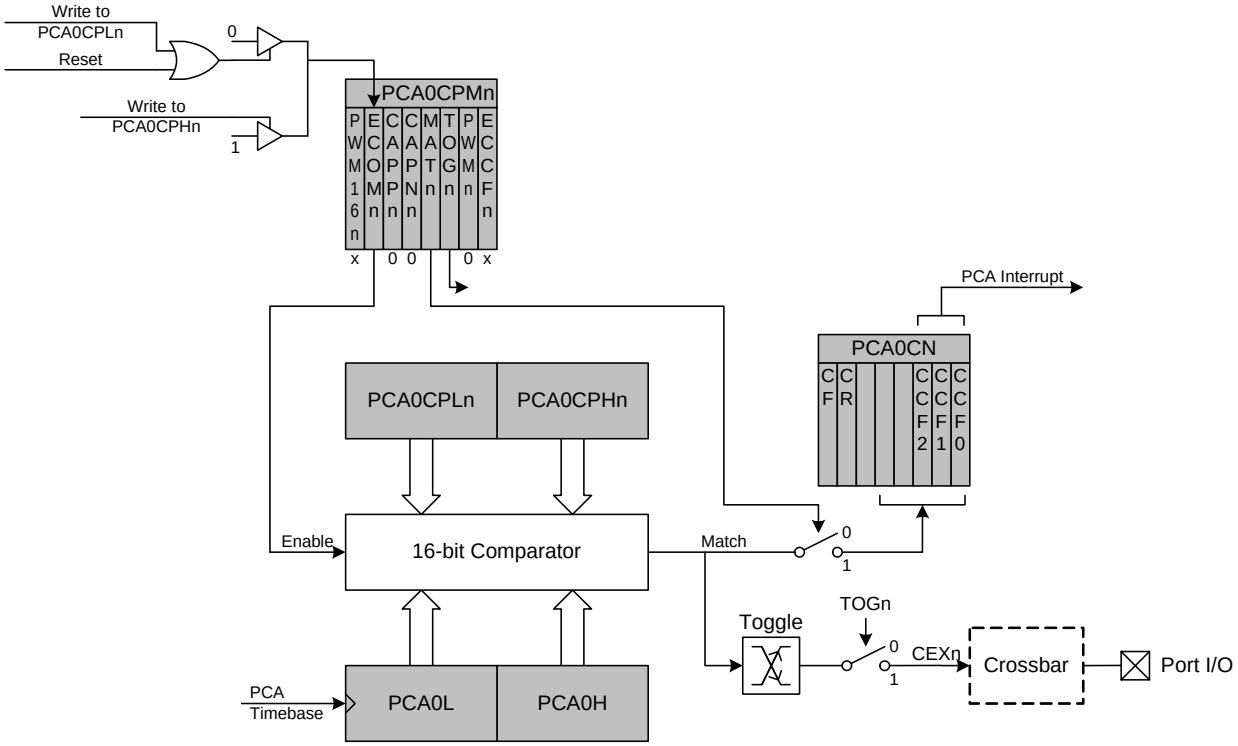

Figure 24.6. PCA High-Speed Output Mode Diagram

24.3.4. Frequency Output Mode

Frequency Output Mode produces a programmable-frequency square wave on the module's associated CEXn pin. The capture/compare module high byte holds the number of PCA clocks to count before the output is toggled. The frequency of the square wave is then defined by Equation 24.1.

$$F_{CEXn} = \frac{F_{PCA}}{2 \times PCA0CPHn}$$

Note: A value of 0x00 in the PCA0CPHn register is equal to 256 for this equation.

Equation 24.1. Square Wave Frequency Output

Where F_{PCA} is the frequency of the clock selected by the CPS2–0 bits in the PCA mode register, PCA0MD. The lower byte of the capture/compare module is compared to the PCA counter low byte; on a match, CEXn is toggled and the offset held in the high byte is added to the matched value in PCA0CPLn. Frequency Output Mode is enabled by setting the ECOMn, TOGn, and PWMn bits in the PCA0CPMn register. Note that the MATn bit should normally be set to 0 in this mode. If the MATn bit is set to 1, the CCFn flag for the channel will be set when the 16-bit PCA0 counter and the 16-bit capture/compare register for the channel are equal.

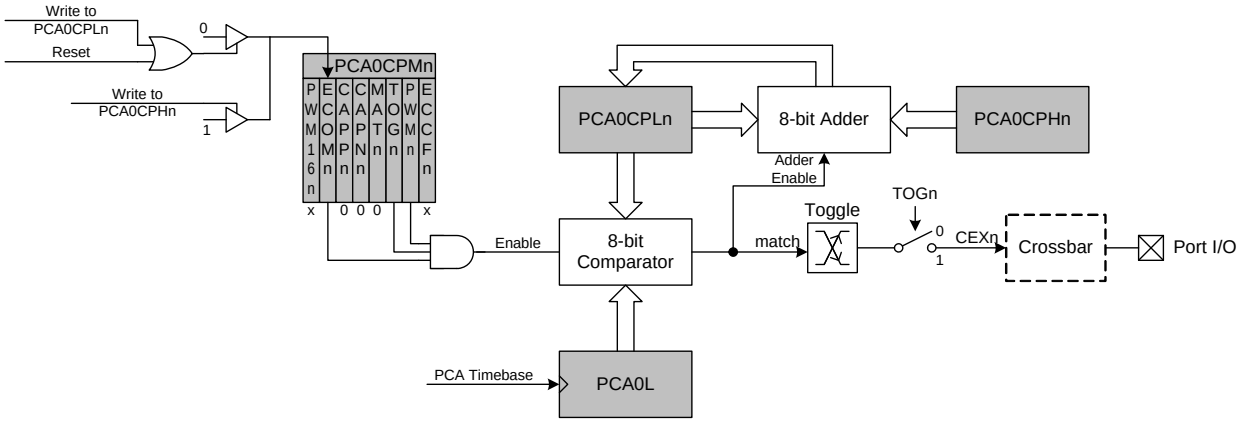

Figure 24.7. PCA Frequency Output Mode

24.3.5. 8-bit, 9-bit, 10-bit and 11-bit Pulse Width Modulator Modes

Each module can be used independently to generate a pulse width modulated (PWM) output on its associated CEXn pin. The frequency of the output is dependent on the timebase for the PCA counter/timer, and the setting of the PWM cycle length (8, 9, 10 or 11-bits). For backwards-compatibility with the 8-bit PWM mode available on other devices, the 8-bit PWM mode operates slightly different than 9, 10 and 11-bit PWM modes. **It is important to note that all channels configured for 8/9/10/11-bit PWM mode will use the same cycle length.** It is not possible to configure one channel for 8-bit PWM mode and another for 11-bit mode (for example). However, other PCA channels can be configured to Pin Capture, High-Speed Output, Software Timer, Frequency Output, or 16-bit PWM mode independently.

24.3.5.1. 8-bit Pulse Width Modulator Mode

The duty cycle of the PWM output signal in 8-bit PWM mode is varied using the module's PCA0CPLn capture/compare register. When the value in the low byte of the PCA counter/timer (PCA0L) is equal to the value in PCA0CPLn, the output on the CEXn pin will be set. When the count value in PCA0L overflows, the CEXn output will be reset (see Figure 24.8). Also, when the counter/timer low byte (PCA0L) overflows from 0xFF to 0x00, PCA0CPLn is reloaded automatically with the value stored in the module's capture/compare high byte (PCA0CPHn) without software intervention. Setting the ECOMn and PWMn bits in the PCA0CPMn register, and setting the CLSEL bits in register PCA0PWM to 00b enables 8-Bit Pulse Width Modulator mode. If the MATn bit is set to 1, the CCFn flag for the module will be set each time an 8-bit comparator match (rising edge) occurs. The COVF flag in PCA0PWM can be used to detect the overflow (falling edge), which will occur every 256 PCA clock cycles. The duty cycle for 8-Bit PWM Mode is given in Equation 24.2.

Important Note About Capture/Compare Registers: When writing a 16-bit value to the PCA0 Capture/Compare registers, the low byte should always be written first. Writing to PCA0CPLn clears the ECOMn bit to 0; writing to PCA0CPHn sets ECOMn to 1.

$$\text{Duty Cycle} = \frac{(256 - PCA0CPHn)}{256}$$

Equation 24.2. 8-Bit PWM Duty Cycle

Using Equation 24.2, the largest duty cycle is 100% (PCA0CPHn = 0), and the smallest duty cycle is 0.39% (PCA0CPHn = 0xFF). A 0% duty cycle may be generated by clearing the ECOMn bit to 0.

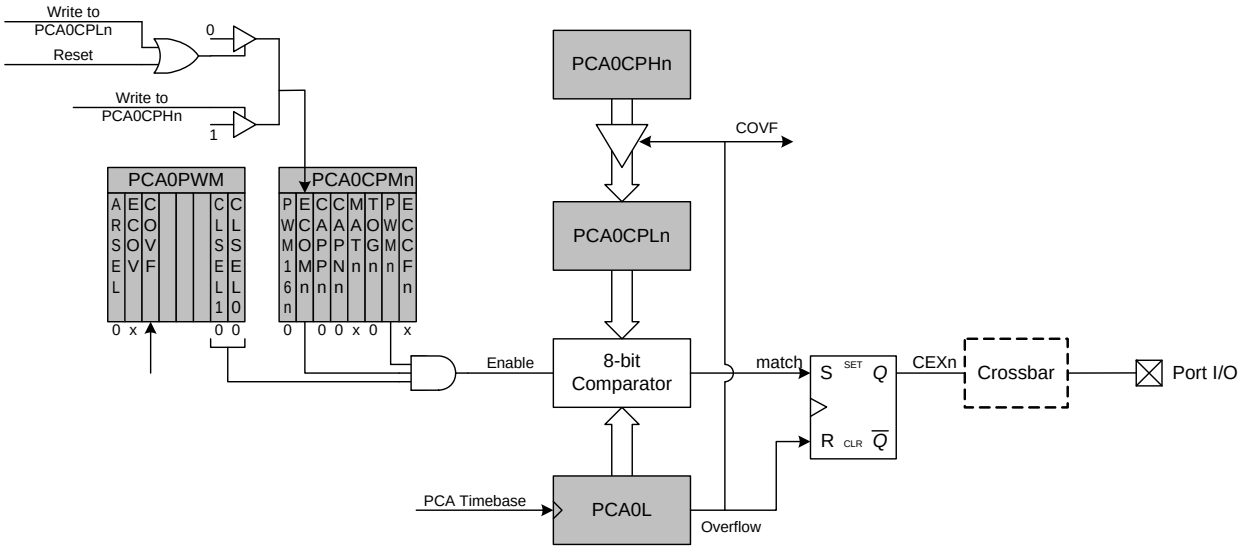

Figure 24.8. PCA 8-Bit PWM Mode Diagram

24.3.5.2. 9/10/11-bit Pulse Width Modulator Mode

The duty cycle of the PWM output signal in 9/10/11-bit PWM mode should be varied by writing to an “Auto-Reload” Register, which is dual-mapped into the PCA0CPHn and PCA0CPLn register locations. The data written to define the duty cycle should be right-justified in the registers. The auto-reload registers are accessed (read or written) when the bit ARSEL in PCA0PWM is set to 1. The capture/compare registers are accessed when ARSEL is set to 0.

When the least-significant N bits of the PCA0 counter match the value in the associated module’s capture/compare register (PCA0CPn), the output on CEXn is asserted high. When the counter overflows from the Nth bit, CEXn is asserted low (see Figure 24.9). Upon an overflow from the Nth bit, the COVF flag is set, and the value stored in the module’s auto-reload register is loaded into the capture/compare register. The value of N is determined by the CLSEL bits in register PCA0PWM.

The 9, 10 or 11-bit PWM mode is selected by setting the ECOMn and PWMn bits in the PCA0CPMn register, and setting the CLSEL bits in register PCA0PWM to the desired cycle length (other than 8-bits). If the MATn bit is set to 1, the CCFn flag for the module will be set each time a comparator match (rising edge) occurs. The COVF flag in PCA0PWM can be used to detect the overflow (falling edge), which will occur every 512 (9-bit), 1024 (10-bit) or 2048 (11-bit) PCA clock cycles. The duty cycle for 9/10/11-Bit PWM Mode is given in Equation 24.2, where N is the number of bits in the PWM cycle.

Important Note About PCA0CPHn and PCA0CPLn Registers: When writing a 16-bit value to the PCA0CPn registers, the low byte should always be written first. Writing to PCA0CPLn clears the ECOMn bit to 0; writing to PCA0CPHn sets ECOMn to 1.

$$\text{Duty Cycle} = \frac{(2^N - PCA0CPn)}{2^N}$$

Equation 24.3. 9, 10, and 11-Bit PWM Duty Cycle

A 0% duty cycle may be generated by clearing the ECOMn bit to 0.

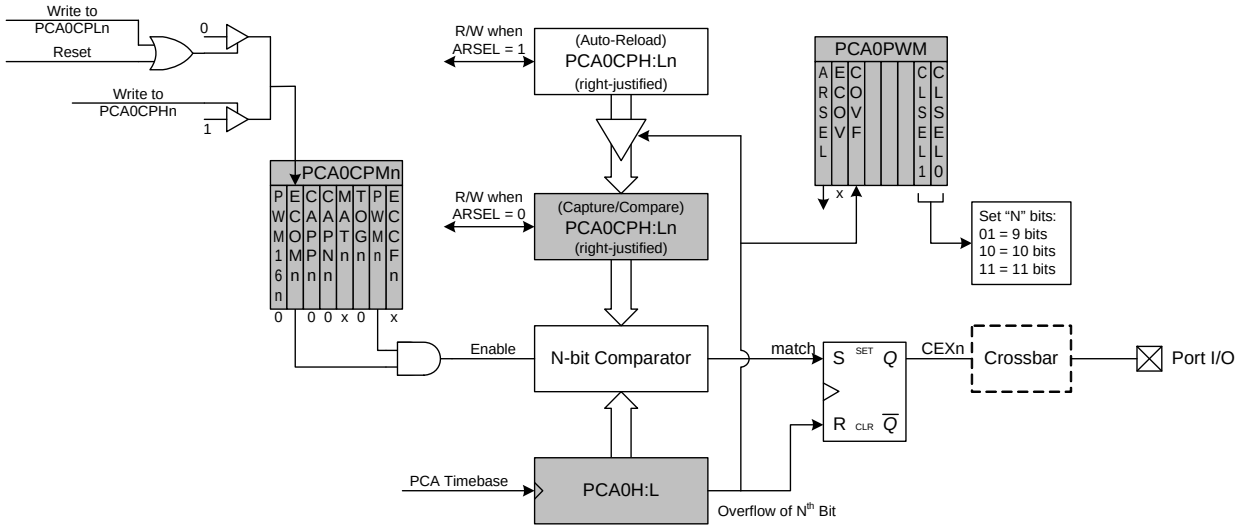

Figure 24.9. PCA 9, 10 and 11-Bit PWM Mode Diagram

24.3.6. 16-Bit Pulse Width Modulator Mode

A PCA module may also be operated in 16-Bit PWM mode. 16-bit PWM mode is independent of the other (8/9/10/11-bit) PWM modes. In this mode, the 16-bit capture/compare module defines the number of PCA clocks for the low time of the PWM signal. When the PCA counter matches the module contents, the output on CEXn is asserted high; when the 16-bit counter overflows, CEXn is asserted low. To output a varying duty cycle, new value writes should be synchronized with PCA CCFn match interrupts. 16-Bit PWM Mode is enabled by setting the ECOMn, PWMn, and PWM16n bits in the PCA0CPMn register. For a varying duty cycle, match interrupts should be enabled (ECCFn = 1 AND MATn = 1) to help synchronize the capture/compare register writes. If the MATn bit is set to 1, the CCFn flag for the module will be set each time a 16-bit comparator match (rising edge) occurs. The CF flag in PCA0CN can be used to detect the overflow (falling edge). The duty cycle for 16-Bit PWM Mode is given by Equation 24.4.

Important Note About Capture/Compare Registers: When writing a 16-bit value to the PCA0 Capture/Compare registers, the low byte should always be written first. Writing to PCA0CPLn clears the ECOMn bit to 0; writing to PCA0CPHn sets ECOMn to 1.

$$\text{Duty Cycle} = \frac{(65536 - PCA0CPn)}{65536}$$

Equation 24.4. 16-Bit PWM Duty Cycle

Using Equation 24.4, the largest duty cycle is 100% (PCA0CPn = 0), and the smallest duty cycle is 0.0015% (PCA0CPn = 0xFFFF). A 0% duty cycle may be generated by clearing the ECOMn bit to 0.

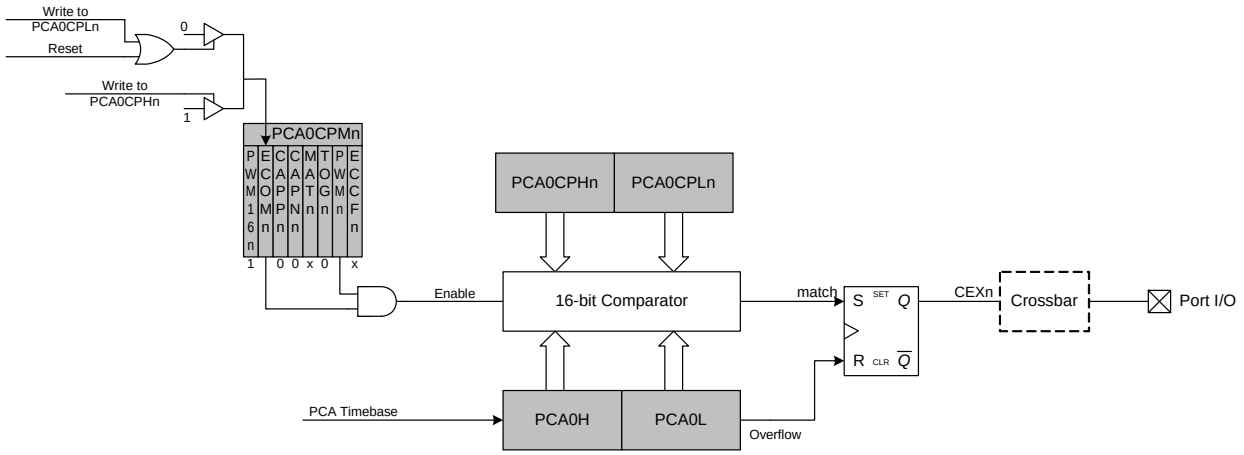

Figure 24.10. PCA 16-Bit PWM Mode

24.4. Watchdog Timer Mode

A programmable watchdog timer (WDT) function is available through the PCA Module 2. The WDT is used to generate a reset if the time between writes to the WDT update register (PCA0CPH2) exceed a specified limit. The WDT can be configured and enabled/disabled as needed by software.

With the WDTE bit set in the PCA0MD register, Module 2 operates as a watchdog timer (WDT). The Module 2 high byte is compared to the PCA counter high byte; the Module 2 low byte holds the offset to be used when WDT updates are performed. **The Watchdog Timer is enabled on reset. Writes to some PCA registers are restricted while the Watchdog Timer is enabled.** The WDT will generate a reset shortly after code begins execution. To avoid this reset, the WDT should be explicitly disabled (and optionally re-configured and re-enabled if it is used in the system).

24.4.1. Watchdog Timer Operation

While the WDT is enabled:

- PCA counter is forced on.
- Writes to PCA0L and PCA0H are not allowed.
- PCA clock source bits (CPS2–CPS0) are frozen.
- PCA Idle control bit (CIDL) is frozen.
- Module 2 is forced into software timer mode.
- Writes to the Module 2 mode register (PCA0CPM2) are disabled.

While the WDT is enabled, writes to the CR bit will not change the PCA counter state; the counter will run until the WDT is disabled. The PCA counter run control bit (CR) will read zero if the WDT is enabled but user software has not enabled the PCA counter. If a match occurs between PCA0CPH2 and PCA0H while the WDT is enabled, a reset will be generated. To prevent a WDT reset, the WDT may be updated with a write of any value to PCA0CPH2. Upon a PCA0CPH2 write, PCA0H plus the offset held in PCA0CPL2 is loaded into PCA0CPH2 (See Figure 24.11).

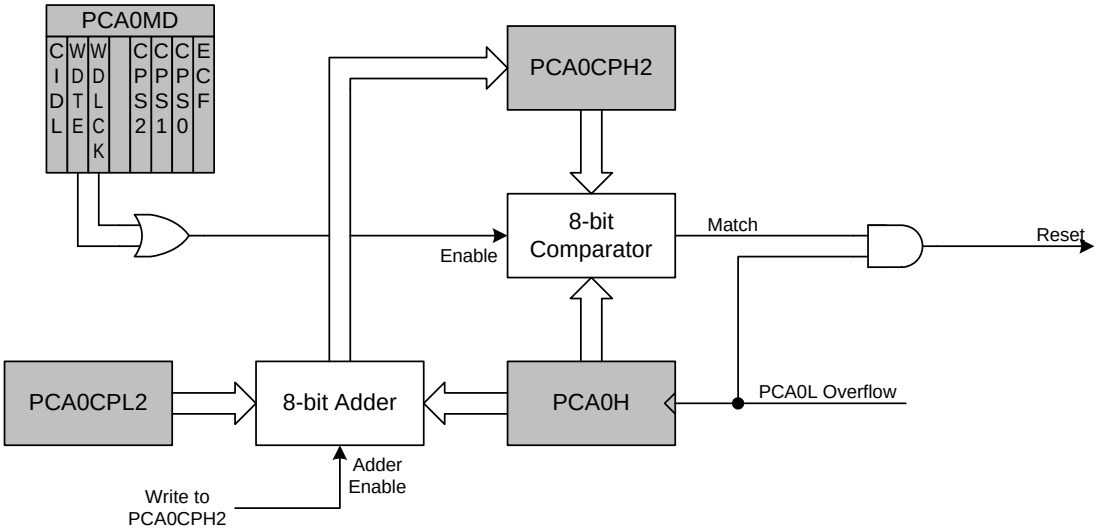

Figure 24.11. PCA Module 2 with Watchdog Timer Enabled

Note that the 8-bit offset held in PCA0CPH2 is compared to the upper byte of the 16-bit PCA counter. This offset value is the number of PCA0L overflows before a reset. Up to 256 PCA clocks may pass before the first PCA0L overflow occurs, depending on the value of the PCA0L when the update is performed. The total offset is then given (in PCA clocks) by Equation 24.5, where PCA0L is the value of the PCA0L register at the time of the update.

$$Offset = (256 \times PCA0CPL4) + (256 - PCA0L)$$

Equation 24.5. Watchdog Timer Offset in PCA Clocks

The WDT reset is generated when PCA0L overflows while there is a match between PCA0CPH2 and PCA0H. Software may force a WDT reset by writing a 1 to the CCF2 flag (PCA0CN.2) while the WDT is enabled.

24.4.2. Watchdog Timer Usage

To configure the WDT, perform the following tasks:

- Disable the WDT by writing a 0 to the WDTE bit.
- Select the desired PCA clock source (with the CPS2–CPS0 bits).
- Load PCA0CPL2 with the desired WDT update offset value.
- Configure the PCA Idle mode (set CIDL if the WDT should be suspended while the CPU is in Idle mode).
- Enable the WDT by setting the WDTE bit to 1.
- Reset the WDT timer by writing to PCA0CPH2.

The PCA clock source and Idle mode select cannot be changed while the WDT is enabled. The watchdog timer is enabled by setting the WDTE or WDLCK bits in the PCA0MD register. When WDLCK is set, the WDT cannot be disabled until the next system reset. If WDLCK is not set, the WDT is disabled by clearing the WDTE bit.

The WDT is enabled following any reset. The PCA0 counter clock defaults to the system clock divided by 12, PCA0L defaults to 0x00, and PCA0CPL2 defaults to 0x00. Using Equation 24.5, this results in a WDT timeout interval of 256 PCA clock cycles, or 3072 system clock cycles. Table 24.3 lists some example time-out intervals for typical system clocks.

Table 24.3. Watchdog Timer Timeout Intervals[1]

System Clock (Hz)	PCA0CPL2	Timeout Interval (ms)
12,000,000	255	65.5
12,000,000	128	33.0
12,000,000	32	8.4
24,000,000	255	32.8
24,000,000	128	16.5
24,000,000	32	4.2
1,500,000[2]	255	524.3
1,500,000[2]	128	264.2
1,500,000[2]	32	67.6
32,768	255	24,000
32,768	128	12,093.75
32,768	32	3,093.75

Notes:
1. Assumes SYSCLK/12 as the PCA clock source, and a PCA0L value of 0x00 at the update time.
2. Internal SYSCLK reset frequency = Internal Oscillator divided by 8.

24.5. Register Descriptions for PCA0

Following are detailed descriptions of the special function registers related to the operation of the PCA.

SFR Definition 24.1. PCA0CN: PCA Control

Bit	7	6	5	4	3	2	1	0
Name	CF	CR				CCF2	CCF1	CCF0
Type	R/W	R/W	R	R	R	R/W	R/W	R/W
Reset	0	0	0	0	0	0	0	0

SFR Address = 0xD8; Bit-Addressable

Bit	Name	Function
7	CF	**PCA Counter/Timer Overflow Flag.** Set by hardware when the PCA Counter/Timer overflows from 0xFFFF to 0x0000. When the Counter/Timer Overflow (CF) interrupt is enabled, setting this bit causes the CPU to vector to the PCA interrupt service routine. This bit is not automatically cleared by hardware and must be cleared by software.
6	CR	**PCA Counter/Timer Run Control.** This bit enables/disables the PCA Counter/Timer. 0: PCA Counter/Timer disabled. 1: PCA Counter/Timer enabled.
5:3	Unused	Unused. Read = 000b, Write = Don't care.
2	CCF2	**PCA Module 2 Capture/Compare Flag.** This bit is set by hardware when a match or capture occurs. When the CCF2 interrupt is enabled, setting this bit causes the CPU to vector to the PCA interrupt service routine. This bit is not automatically cleared by hardware and must be cleared by software.
1	CCF1	**PCA Module 1 Capture/Compare Flag.** This bit is set by hardware when a match or capture occurs. When the CCF1 interrupt is enabled, setting this bit causes the CPU to vector to the PCA interrupt service routine. This bit is not automatically cleared by hardware and must be cleared by software.
0	CCF0	**PCA Module 0 Capture/Compare Flag.** This bit is set by hardware when a match or capture occurs. When the CCF0 interrupt is enabled, setting this bit causes the CPU to vector to the PCA interrupt service routine. This bit is not automatically cleared by hardware and must be cleared by software.

SFR Definition 24.2. PCA0MD: PCA Mode

Bit	7	6	5	4	3	2	1	0
Name	CIDL	WDTE	WDLCK		CPS2	CPS1	CPS0	ECF
Type	R/W	R/W	R/W	R	R/W	R/W	R/W	R/W
Reset	0	1	0	0	0	0	0	0

SFR Address = 0xD9

Bit	Name	Function
7	CIDL	**PCA Counter/Timer Idle Control.** Specifies PCA behavior when CPU is in Idle Mode. 0: PCA continues to function normally while the system controller is in Idle Mode. 1: PCA operation is suspended while the system controller is in Idle Mode.
6	WDTE	**Watchdog Timer Enable** If this bit is set, PCA Module 2 is used as the watchdog timer. 0: Watchdog Timer disabled. 1: PCA Module 2 enabled as Watchdog Timer.
5	WDLCK	**Watchdog Timer Lock** This bit locks/unlocks the Watchdog Timer Enable. When WDLCK is set, the Watchdog Timer may not be disabled until the next system reset. 0: Watchdog Timer Enable unlocked. 1: Watchdog Timer Enable locked.
4	Unused	Unused. Read = 0b, Write = Don't care.
3:1	CPS[2:0]	**PCA Counter/Timer Pulse Select.** These bits select the timebase source for the PCA counter 000: System clock divided by 12 001: System clock divided by 4 010: Timer 0 overflow 011: High-to-low transitions on ECI (max rate = system clock divided by 4) 100: System clock 101: External clock divided by 8 (synchronized with the system clock) 11x: Reserved
0	ECF	**PCA Counter/Timer Overflow Interrupt Enable.** This bit sets the masking of the PCA Counter/Timer Overflow (CF) interrupt. 0: Disable the CF interrupt. 1: Enable a PCA Counter/Timer Overflow interrupt request when CF (PCA0CN.7) is set.
Note: When the WDTE bit is set to 1, the other bits in the PCA0MD register cannot be modified. To change the contents of the PCA0MD register, the Watchdog Timer must first be disabled.		

SFR Definition 24.3. PCA0PWM: PCA PWM Configuration

Bit	7	6	5	4	3	2	1	0
Name	ARSEL	ECOV	COVF				CLSEL[1:0]	
Type	R/W	R/W	R/W	R	R	R	R/W	
Reset	0	0	0	0	0	0	0	0

SFR Address = 0xF4

Bit	Name	Function
7	ARSEL	**Auto-Reload Register Select.** This bit selects whether to read and write the normal PCA capture/compare registers (PCA0CPn), or the Auto-Reload registers at the same SFR addresses. This function is used to define the reload value for 9, 10, and 11-bit PWM modes. In all other modes, the Auto-Reload registers have no function. 0: Read/Write Capture/Compare Registers at PCA0CPHn and PCA0CPLn. 1: Read/Write Auto-Reload Registers at PCA0CPHn and PCA0CPLn.
6	ECOV	**Cycle Overflow Interrupt Enable.** This bit sets the masking of the Cycle Overflow Flag (COVF) interrupt. 0: COVF will not generate PCA interrupts. 1: A PCA interrupt will be generated when COVF is set.
5	COVF	**Cycle Overflow Flag.** This bit indicates an overflow of the 8th, 9th, 10th, or 11th bit of the main PCA counter (PCA0). The specific bit used for this flag depends on the setting of the Cycle Length Select bits. The bit can be set by hardware or software, but must be cleared by software. 0: No overflow has occurred since the last time this bit was cleared. 1: An overflow has occurred since the last time this bit was cleared.
4:2	Unused	Unused. Read = 000b; Write = Don’t care.
1:0	CLSEL[1:0]	**Cycle Length Select.** When 16-bit PWM mode is not selected, these bits select the length of the PWM cycle, between 8, 9, 10, or 11 bits. This affects all channels configured for PWM which are not using 16-bit PWM mode. These bits are ignored for individual channels configured to16-bit PWM mode. 00: 8 bits. 01: 9 bits. 10: 10 bits. 11: 11 bits.

SFR Definition 24.4. PCA0CPMn: PCA Capture/Compare Mode

Bit	7	6	5	4	3	2	1	0
Name	PWM16n	ECOMn	CAPPn	CAPNn	MATn	TOGn	PWMn	ECCFn
Type	R/W	R/W	R/W	R/W	R/W	R/W	R/W	R/W
Reset	0	0	0	0	0	0	0	0

SFR Addresses: 0xDA (n = 0), 0xDB (n = 1), 0xDC (n = 2),

Bit	Name	Function
7	PWM16n	**16-bit Pulse Width Modulation Enable.** This bit enables 16-bit mode when Pulse Width Modulation mode is enabled. 0: 8 to 11-bit PWM selected. 1: 16-bit PWM selected.
6	ECOMn	**Comparator Function Enable.** This bit enables the comparator function for PCA module n when set to 1.
5	CAPPn	**Capture Positive Function Enable.** This bit enables the positive edge capture for PCA module n when set to 1.
4	CAPNn	**Capture Negative Function Enable.** This bit enables the negative edge capture for PCA module n when set to 1.
3	MATn	**Match Function Enable.** This bit enables the match function for PCA module n when set to 1. When enabled, matches of the PCA counter with a module's capture/compare register cause the CCFn bit in PCA0MD register to be set to logic 1.
2	TOGn	**Toggle Function Enable.** This bit enables the toggle function for PCA module n when set to 1. When enabled, matches of the PCA counter with a module's capture/compare register cause the logic level on the CEXn pin to toggle. If the PWMn bit is also set to logic 1, the module operates in Frequency Output Mode.
1	PWMn	**Pulse Width Modulation Mode Enable.** This bit enables the PWM function for PCA module n when set to 1. When enabled, a pulse width modulated signal is output on the CEXn pin. 8 to 11-bit PWM is used if PWM16n is cleared; 16-bit mode is used if PWM16n is set to logic 1. If the TOGn bit is also set, the module operates in Frequency Output Mode.
0	ECCFn	**Capture/Compare Flag Interrupt Enable.** This bit sets the masking of the Capture/Compare Flag (CCFn) interrupt. 0: Disable CCFn interrupts. 1: Enable a Capture/Compare Flag interrupt request when CCFn is set.
Note: When the WDTE bit is set to 1, the PCA0CPM2 register cannot be modified, and module 2 acts as the watchdog timer. To change the contents of the PCA0CPM2 register or the function of module 2, the Watchdog Timer must be disabled.		

SFR Definition 24.5. PCA0L: PCA Counter/Timer Low Byte

Bit	7	6	5	4	3	2	1	0
Name	PCA0[7:0]							
Type	R/W	R/W	R/W	R/W	R/W	R/W	R/W	R/W
Reset	0	0	0	0	0	0	0	0

SFR Address = 0xF9

Bit	Name	Function
7:0	PCA0[7:0]	**PCA Counter/Timer Low Byte.** The PCA0L register holds the low byte (LSB) of the 16-bit PCA Counter/Timer.
Note: When the WDTE bit is set to 1, the PCA0L register cannot be modified by software. To change the contents of the PCA0L register, the Watchdog Timer must first be disabled.		

SFR Definition 24.6. PCA0H: PCA Counter/Timer High Byte

Bit	7	6	5	4	3	2	1	0
Name	PCA0[15:8]							
Type	R/W	R/W	R/W	R/W	R/W	R/W	R/W	R/W
Reset	0	0	0	0	0	0	0	0

SFR Address = 0xFA

Bit	Name	Function
7:0	PCA0[15:8]	**PCA Counter/Timer High Byte.** The PCA0H register holds the high byte (MSB) of the 16-bit PCA Counter/Timer. Reads of this register will read the contents of a “snapshot” register, whose contents are updated only when the contents of PCA0L are read (see Section 24.1).
Note: When the WDTE bit is set to 1, the PCA0H register cannot be modified by software. To change the contents of the PCA0H register, the Watchdog Timer must first be disabled.		

SFR Definition 24.7. PCA0CPLn: PCA Capture Module Low Byte

Bit	7	6	5	4	3	2	1	0
Name	PCA0CPn[7:0]							
Type	R/W	R/W	R/W	R/W	R/W	R/W	R/W	R/W
Reset	0	0	0	0	0	0	0	0

SFR Addresses: 0xFB (n = 0), 0xE9 (n = 1), 0xEB (n = 2),

Bit	Name	Function
7:0	PCA0CPn[7:0]	**PCA Capture Module Low Byte.** The PCA0CPLn register holds the low byte (LSB) of the 16-bit capture module n. This register address also allows access to the low byte of the corresponding PCA channel's auto-reload value for 9, 10, or 11-bit PWM mode. The ARSEL bit in register PCA0PWM controls which register is accessed.
Note: A write to this register will clear the module's ECOMn bit to a 0.		

SFR Definition 24.8. PCA0CPHn: PCA Capture Module High Byte

Bit	7	6	5	4	3	2	1	0
Name	PCA0CPn[15:8]							
Type	R/W	R/W	R/W	R/W	R/W	R/W	R/W	R/W
Reset	0	0	0	0	0	0	0	0

SFR Addresses: 0xFC (n = 0), 0xEA (n = 1), 0xEC (n = 2)

Bit	Name	Function
7:0	PCA0CPn[15:8]	**PCA Capture Module High Byte.** The PCA0CPHn register holds the high byte (MSB) of the 16-bit capture module n. This register address also allows access to the high byte of the corresponding PCA channel's auto-reload value for 9, 10, or 11-bit PWM mode. The ARSEL bit in register PCA0PWM controls which register is accessed.
Note: A write to this register will set the module's ECOMn bit to a 1.		

25. C2 Interface

C8051T622/3 and C8051T326/7 devices include an on-chip Silicon Labs 2-Wire (C2) debug interface to allow EPROM programming and in-system debugging with the production part installed in the end application. The C2 interface operates using only two pins: a bi-directional data signal (C2D), and a clock input (C2CK). See the C2 Interface Specification for details on the C2 protocol.

25.1. C2 Interface Registers

The following describes the C2 registers necessary to perform EPROM programming functions through the C2 interface. All C2 registers are accessed through the C2 interface as described in the C2 Interface Specification.

C2 Register Definition 25.1. C2ADD: C2 Address

Bit	7	6	5	4	3	2	1	0
Name	C2ADD[7:0]							
Type	R/W							
Reset	0	0	0	0	0	0	0	0

Bit	Name	Function
7:0	C2ADD[7:0]	**Write: C2 Address.** Selects the target Data register for C2 Data Read and Data Write commands according to the following list.

Address	Name	Description
0x00	DEVICEID	Selects the Device ID Register (read only)
0x01	REVID	Selects the Revision ID Register (read only)
0x02	DEVCTL	Selects the C2 Device Control Register
0xDF	EPCTL	Selects the C2 EPROM Programming Control Register
0xBF	EPDAT	Selects the C2 EPROM Data Register
0xB7	EPSTAT	Selects the C2 EPROM Status Register
0xAF	EPADDRH	Selects the C2 EPROM Address High Byte Register
0xAE	EPADDRL	Selects the C2 EPROM Address Low Byte Register
0xA9	CRC0	Selects the CRC0 Register
0xAA	CRC1	Selects the CRC1 Register
0xAB	CRC2	Selects the CRC2 Register
0xAC	CRC3	Selects the CRC3 Register

Read: C2 Status

Returns status information on the current programming operation.
When the MSB (bit 7) is set to 1, a read or write operation is in progress. All other bits can be ignored by the programming tools.

C2 Register Definition 25.2. DEVICEID: C2 Device ID

Bit	7	6	5	4	3	2	1	0
Name	DEVICEID[7:0]							
Type	R/W							
Reset	0	0	0	1	1	0	0	0

C2 Address: 0x00

Bit	Name	Function
7:0	DEVICEID[7:0]	**Device ID.** This read-only register returns the 8-bit device ID: 0x19 (C8051T622/3 and C8051T326/7).

C2 Register Definition 25.3. REVID: C2 Revision ID

Bit	7	6	5	4	3	2	1	0
Name	REVID[7:0]							
Type	R/W							
Reset	Varies	Varies	Varies	Varies	Varies	Varies	Varies	Varies

C2 Address: 0x01

Bit	Name	Function
7:0	REVID[7:0]	**Revision ID.** This read-only register returns the 8-bit revision ID. For example: 0x00 = Revision A.

C2 Register Definition 25.4. DEVCTL: C2 Device Control

Bit	7	6	5	4	3	2	1	0
Name	DEVCTL[7:0]							
Type	R/W							
Reset	0	0	0	0	0	0	0	0

C2 Address: 0x02

Bit	Name	Function
7:0	DEVCTL[7:0]	**Device Control Register.** This register is used to halt the device for EPROM operations via the C2 interface. Refer to the EPROM chapter for more information.

C2 Register Definition 25.5. EPCTL: EPROM Programming Control Register

Bit	7	6	5	4	3	2	1	0
Name	EPCTL[7:0]							
Type	R/W							
Reset	0	0	0	0	0	0	0	0

C2 Address: 0xDF

Bit	Name	Function
7:0	EPCTL[7:0]	**EPROM Programming Control Register.** This register is used to enable EPROM programming via the C2 interface. Refer to the EPROM chapter for more information.

C2 Register Definition 25.6. EPDAT: C2 EPROM Data

Bit	7	6	5	4	3	2	1	0
Name	EPDAT[7:0]							
Type	R/W							
Reset	0	0	0	0	0	0	0	0

C2 Address: 0xBF

Bit	Name	Function
7:0	EPDAT[7:0]	**C2 EPROM Data Register.** This register is used to pass EPROM data during C2 EPROM operations.

C2 Register Definition 25.7. EPSTAT: C2 EPROM Status

Bit	7	6	5	4	3	2	1	0
Name	WRLOCK	RDLOCK						ERROR
Type	R	R	R	R	R	R	R	R
Reset	0	0	0	0	0	0	0	0

C2 Address: 0xB7

Bit	Name	Function
7	WRLOCK	**Write Lock Indicator.** Set to 1 if EPADDR currently points to a write-locked address.
6	RDLOCK	**Read Lock Indicator.** Set to 1 if EPADDR currently points to a read-locked address.
5:1	Unused	Unused. Read = 00000b; Write = don’t care.
0	ERROR	**Error Indicator.** Set to 1 if last EPROM read or write operation failed due to a security restriction.

C2 Register Definition 25.8. EPADDRH: C2 EPROM Address High Byte

Bit	7	6	5	4	3	2	1	0
Name	EPADDR[15:8]							
Type	R/W							
Reset	0	0	0	0	0	0	0	0

C2 Address: 0xAF

Bit	Name	Function
7:0	EPADDR[15:8]	**C2 EPROM Address High Byte.** This register is used to set the EPROM address location during C2 EPROM operations.

C2 Register Definition 25.9. EPADDRL: C2 EPROM Address Low Byte

Bit	7	6	5	4	3	2	1	0
Name	EPADDR[7:0]							
Type	R/W							
Reset	0	0	0	0	0	0	0	0

C2 Address: 0xAE

Bit	Name	Function
7:0	EPADDR[15:8]	**C2 EPROM Address Low Byte.** This register is used to set the EPROM address location during C2 EPROM operations.

C2 Register Definition 25.10. CRC0: CRC Byte 0

Bit	7	6	5	4	3	2	1	0
Name	CRC[7:0]							
Type	R/W							
Reset	0	0	0	0	0	0	0	0

C2 Address: 0xA9

Bit	Name	Function
7:0	CRC[7:0]	**CRC Byte 0.** A write to this register initiates a 16-bit CRC of one 256-byte block of EPROM memory. The byte written to CRC0 is the upper byte of the 16-bit address where the CRC will begin. The lower byte of the beginning address is always 0x00. When complete, the 16-bit result will be available in CRC1 (MSB) and CRC0 (LSB). See Section “13.4. Program Memory CRC” on page 74.

C2 Register Definition 25.11. CRC1: CRC Byte 1

Bit	7	6	5	4	3	2	1	0
Name	CRC[15:8]							
Type	R/W							
Reset	0	0	0	0	0	0	0	0

C2 Address: 0xAA

Bit	Name	Function
7:0	CRC[15:8]	**CRC Byte 1.** A write to this register initiates a 32-bit CRC on the entire program memory space. The CRC begins at address 0x0000. When complete, the 32-bit result is stored in CRC3 (MSB), CRC2, CRC1, and CRC0 (LSB). See Section “13.4. Program Memory CRC” on page 74.

C2 Register Definition 25.12. CRC2: CRC Byte 2

Bit	7	6	5	4	3	2	1	0
Name	CRC[23:16]							
Type	R/W							
Reset	0	0	0	0	0	0	0	0

C2 Address: 0xAB

Bit	Name	Function
7:0	CRC[23:16]	**CRC Byte 2.** See Section “13.4. Program Memory CRC” on page 74.

C2 Register Definition 25.13. CRC3: CRC Byte 3

Bit	7	6	5	4	3	2	1	0
Name	CRC[31:24]							
Type	R/W							
Reset	0	0	0	0	0	0	0	0

C2 Address: 0xAC

Bit	Name	Function
7:0	CRC[31:24]	**CRC Byte 3.** See Section “13.4. Program Memory CRC” on page 74.

25.2. C2 Pin Sharing

The C2 protocol allows the C2 pins to be shared with user functions so that in-system debugging and EPROM programming functions may be performed. This is possible because C2 communication is typically performed when the device is in the halt state, where all on-chip peripherals and user software are stalled. In this halted state, the C2 interface can safely ‘borrow’ the C2CK (normally RST) and C2D pins. In most applications, external resistors are required to isolate C2 interface traffic from the user application when performing debug functions. These external resistors are not necessary for production boards. A typical isolation configuration is shown in Figure 25.1.

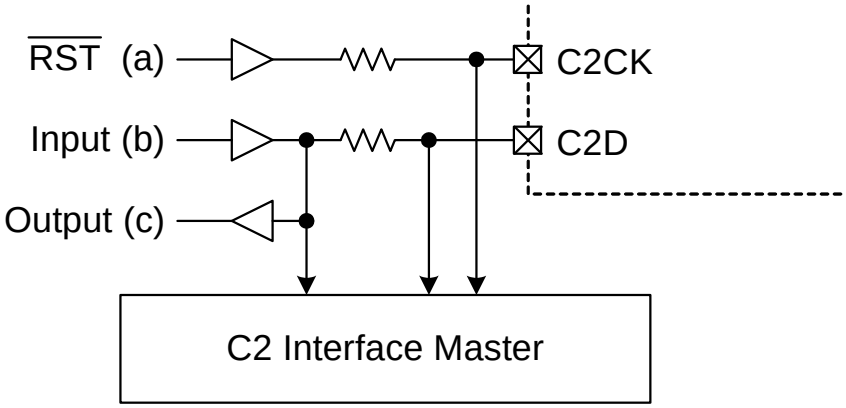

Figure 25.1. Typical C2 Pin Sharing

The configuration in Figure 25.1 assumes the following:

1. The user input (b) cannot change state while the target device is halted.
2. The $\overline{\text{RST}}$ pin on the target device is used as an input only.

Additional resistors may be necessary depending on the specific application.

DOCUMENT CHANGE LIST

Revision 0.1 to Revision 1.0

- Updated “Electrical Characteristics” on page 28.

Revision 1.0 to Revision 1.1

- Updated reset values for POWER, EMI0CF, VDM0CN, and P1 SFRs.
- Updated Figure 16.1 on page 86.

CONTACT INFORMATION

Silicon Laboratories Inc.

Silicon Laboratories Inc.
400 West Cesar Chavez
Austin, TX 78701
Tel: 1+(512) 416-8500
Fax: 1+(512) 416-9669
Toll Free: 1+(877) 444-3032

Please visit the Silicon Labs Technical Support web page:
https://www.silabs.com/support/pages/contacttechnicalsupport.aspx
and register to submit a technical support request.

The information in this document is believed to be accurate in all respects at the time of publication but is subject to change without notice. Silicon Laboratories assumes no responsibility for errors and omissions, and disclaims responsibility for any consequences resulting from the use of information included herein. Additionally, Silicon Laboratories assumes no responsibility for the functioning of undescribed features or parameters. Silicon Laboratories reserves the right to make changes without further notice. Silicon Laboratories makes no warranty, representation or guarantee regarding the suitability of its products for any particular purpose, nor does Silicon Laboratories assume any liability arising out of the application or use of any product or circuit, and specifically disclaims any and all liability, including without limitation consequential or incidental damages. Silicon Laboratories products are not designed, intended, or authorized for use in applications intended to support or sustain life, or for any other application in which the failure of the Silicon Laboratories product could create a situation where personal injury or death may occur. Should Buyer purchase or use Silicon Laboratories products for any such unintended or unauthorized application, Buyer shall indemnify and hold Silicon Laboratories harmless against all claims and damages.

Silicon Laboratories and Silicon Labs are trademarks of Silicon Laboratories Inc.

Other products or brandnames mentioned herein are trademarks or registered trademarks of their respective holders