DATE	REV.	ECN	APP'D BY
9-22-05	B1	7264	TRM
11-1-05	B2	7365	TRM
1-23-06	B3	7441	JM
5-30-12	B4	9480	SMN

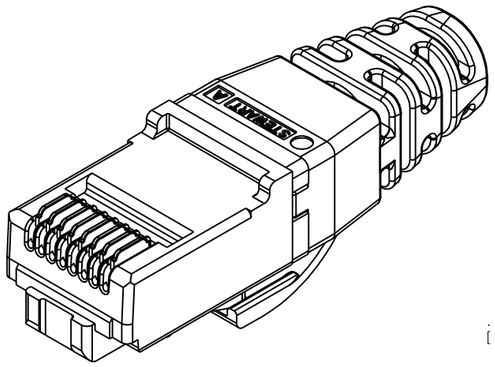

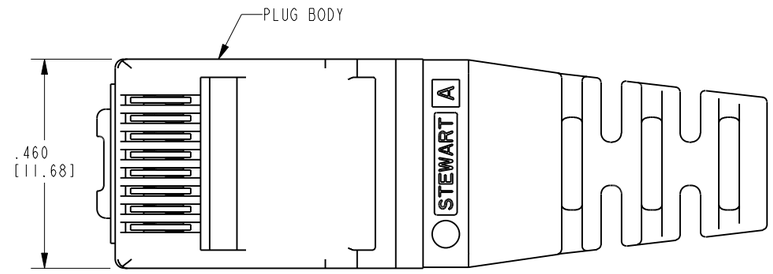

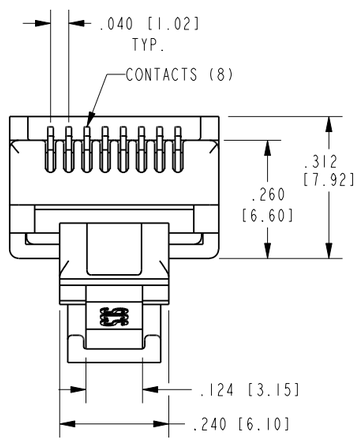

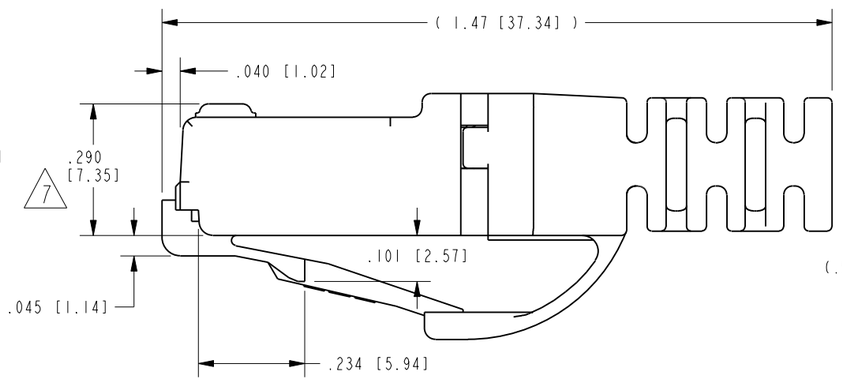

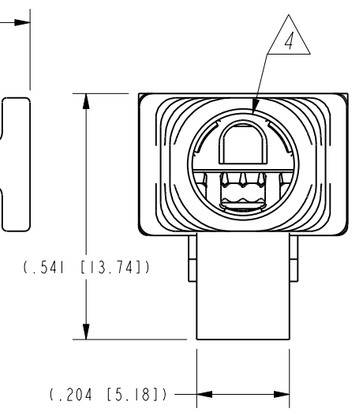

NOTES:

1. PLUG KIT CONSISTS OF:
   PRE-INSERTED PLUG BODY
   LOAD BAR
   STRAIN RELIEF

2. MATERIALS:
   PLUG BODY: CLEAR POLYCARBONATE, UL 94-V0
   LOAD BAR: CLEAR POLYCARBONATE, UL 94-V0
   STRAIN RELIEF: CLEAR POLYCARBONATE, UL 94-V0
   CONTACTS: COPPER ALLOY, SELECTIVE GOLD PLATING

3. CONTACTS TERMINATE SOLID OR STRANDED CONDUCTORS BETWEEN .037 [0.94] TO .042 [1.07] OUTSIDE DIAMETER OF INSULATION.

4. STRAIN RELIEF IS FOR CABLES WITH OUTSIDE DIAMETERS OF .220 [5.59] TO .230 [5.84].

5. PLUG SPECIFICATION: FOR CATEGORY 6 APPLICATIONS.

6. TOLERANCES COMPLY WITH F.C.C. DIMENSION REQUIREMENTS.

7. TERMINATED PLUG HEIGHT: .237 [6.02] ±.005 [0.13].

8. FOR PRODUCT SPECIFICATION SEE PR026-01

BAG OF 25	50 MICRO-INCHES [1.27um]	SS-39100-017
BULK	50 MICRO-INCHES [1.27um]	SS-39100-008
PACKAGE	CONTACT PLATING IN MATING AREA	PART NUMBER

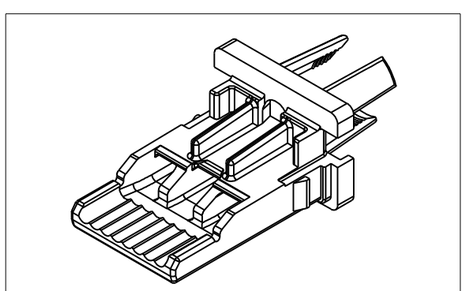

LOAD BAR

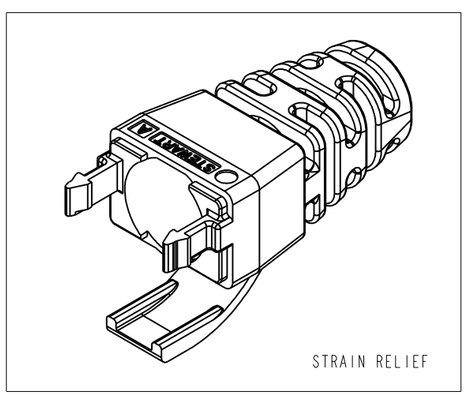

STRAIN RELIEF

RoHS 2002/95/EC

THIRD ANGLE PROJECTION

DO NOT SCALE DRAWING

DRAWING IS SUBJECT TO CHANGE WITHOUT NOTICE

DIMENSIONS: INCHES [METRIC]

UNLESS OTHERWISE SPECIFIED TOLERANCES ARE ±.005 [0.13] ANGLES ARE ±1°

SHEET NO. 1 OF 1

Bel Stewart Connector

11118 Susquehanna Trail South
Glen Rock, PA 17327-9199
(717) 235-7512 Fax: (717) 235-7954
http://www.stewartconnector.com

TITLE: 8 POSITION/8 CONDUCTOR CAT6 UNSHIELDED PLUG LOAD BAR & STRAIN ASS'Y (ANTI-SNAG VERSION)

THIS DRAWING AND THE SUBJECT MATTER SHOWN THEREON ARE CONFIDENTIAL AND THE PROPRIETARY PROPERTY OF BEL STEWART CONNECTOR AND SHALL NOT BE REPRODUCED, COPIED, OR USED IN ANY MANNER WITHOUT PRIOR WRITTEN CONSENT OF BEL STEWART CONNECTOR. THIS PRODUCT MAY BE PROTECTED BY ONE OR MORE OF THE FOLLOWING US PATENTS: 5628647 6402559 6409535 6524128 7753717 8033863 OTHER PATENTS MAY BE PENDING.

DRN BY: TRM	DATE 1-15-04		
APPD BY: RGC	DATE 2-13-04		
DWG. NO. CT390027		REV. B4	

REV. 7/3/03

Pro/E