SHEET OF

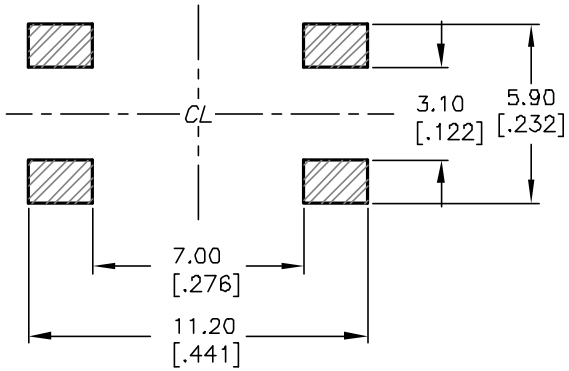

RECOMMENDED MOUNTING PAD

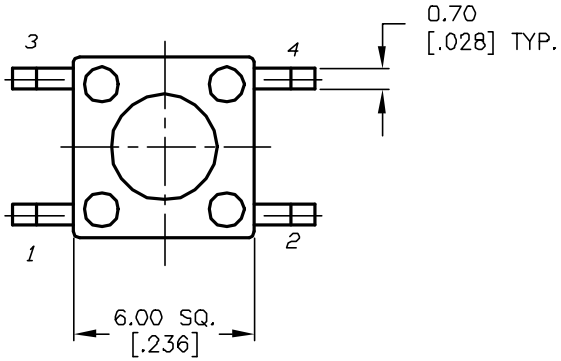

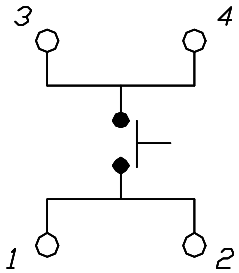

CIRCUIT: SPST

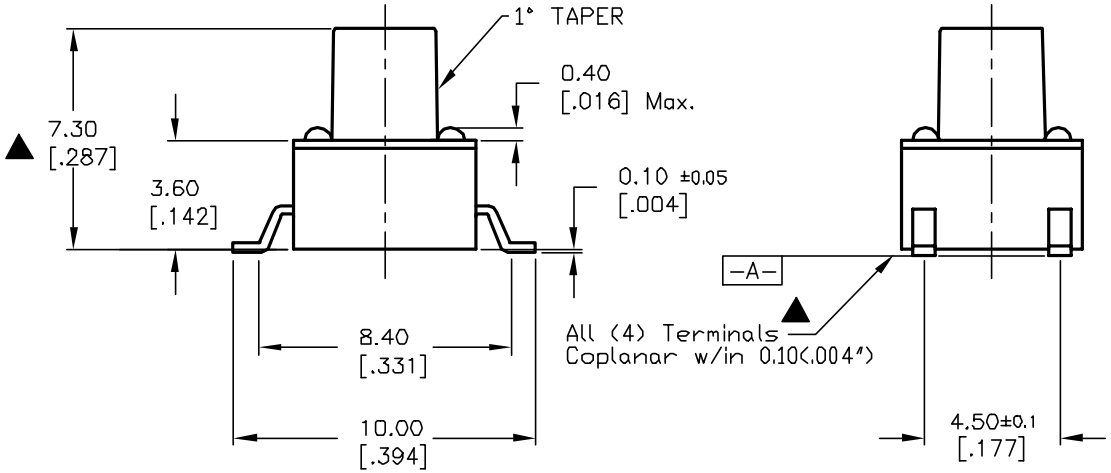

NOTES:

1. ALL DIMENSIONS IN MM [INCH]
2. GENERAL TOLERANCE: X.X=±0.4
   X.XX=±0.25
3. TERM. NOS. FOR REFERENCE ONLY.
4. RATINGS: 12VDC, 50mA
5. CONTACT MATERIAL: Silver
6. ▲ OPERATING FORCE: 260±50gf
7. TRAVEL: 0.25±0.1mm
8. CONTACT RESISTANCE: 100 milli Ω Max.
9. ELECTRICAL LIFE: 100,000 CYCLES min.
10. ▲ DESIGNATE MAJOR FEATURE:
11. BODY& STEM: HIGH TEMP. PLASTIC -PPS RYTON-R-4
12. ▲ PACKAGED: TAPE & REEL
13. ▲ DENOTES CRITICAL PARAMETER.

REV.	ECN No.	DESCRIPTION	DATE	CHKD
A	13043	RELEASED FOR PRODUCTION	4/14/03	AR

THE INFORMATION CONTAINED IN THIS DOCUMENT IS PROPRIETARY TO E-SWITCH AND IS NOT TO BE COPIED OR TRANSFERRED

E-SWITCH®

TITLE: TL3301E F260 Q G (TAPE & REEL)

SCALE	DATE	DR	DWG	REV
4:1	4/14/03	AR	D310637	A