DRAWING FOR REFERENCE: This is subject to change without notice
08/11/2012

HRS DRAWING FOR REFERENCE

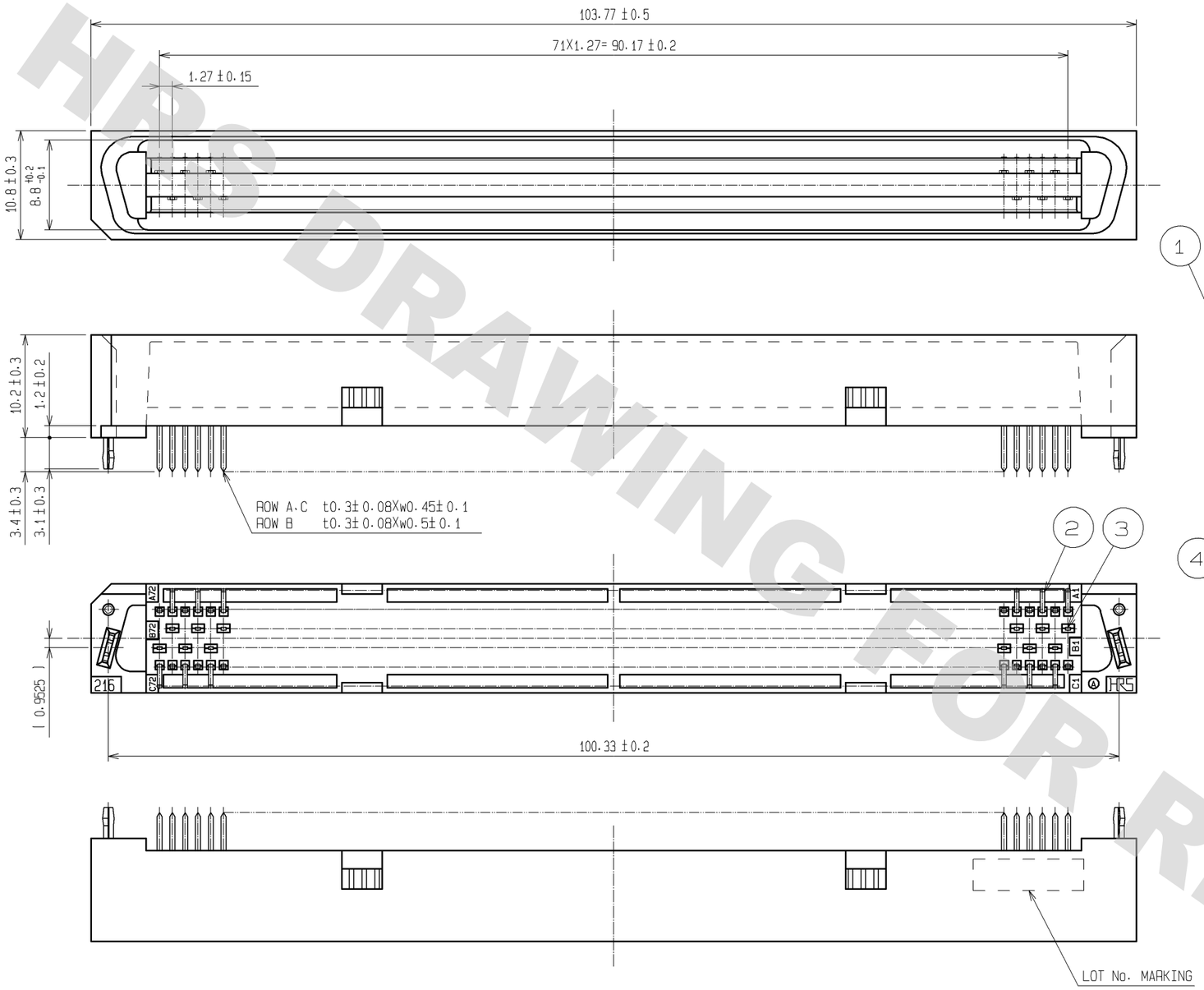

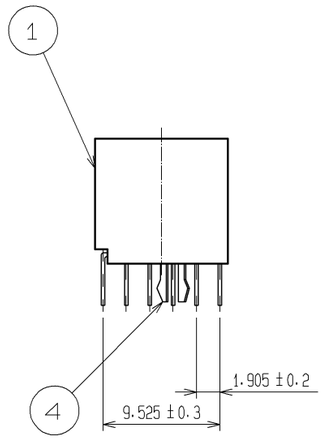

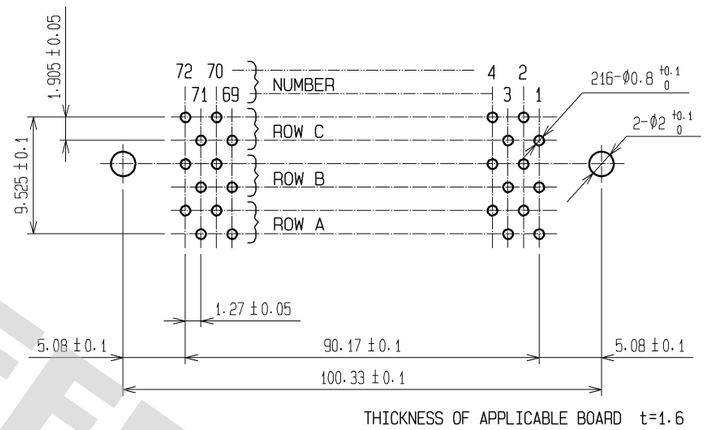

RECOMMENDED HOLE PATTERN DIMENSION OF PCB (MOUNTING SIDE) (FREE)

NOTE THE DIMENSIONS IN PARENTHESES ARE FOR REFERENCE.

CONTACTING ORDER OF TERMINAL

1	ROW B
2	ROW A.C

NO.	MATERIAL	FINISH , REMARKS	NO.	MATERIAL	FINISH , REMARKS
4	PHOSPHOR BRONZE	TIN-PLATING	2, 3	BRASS	CONTACT AREA:GOLD 0.2μm min.
					DIP AREA:TIN-PLATING 2μm min.
1	PPS	BLACK UL94V-0			UNDER PLATED:NICKEL 2.5μm min.

UNITS	SCALE	COUNT	DESCRIPTION OF REVISIONS	DESIGNED	CHECKED	DATE
mm	2 : 1					

HRS HIROSE ELECTRIC CO., LTD.

APPROVED	: HS. OKAWA	07.01.26	DRAWING NO.	EDC3-082023-21
CHECED	: HS. OZAWA	07.01.26	PART NO.	FX1-216P-1.27DSAL(71)
DESIGNED	: KT. DOI	07.01.26	CODE NO.	CL571-0355-4-71
DRAWN	: TS. MIYAKI	07.01.25		1/1