DRAWING FOR REFERENCE: This is subject to change without notice
08/11/2012

HRS DRAWING FOR REFERENCE

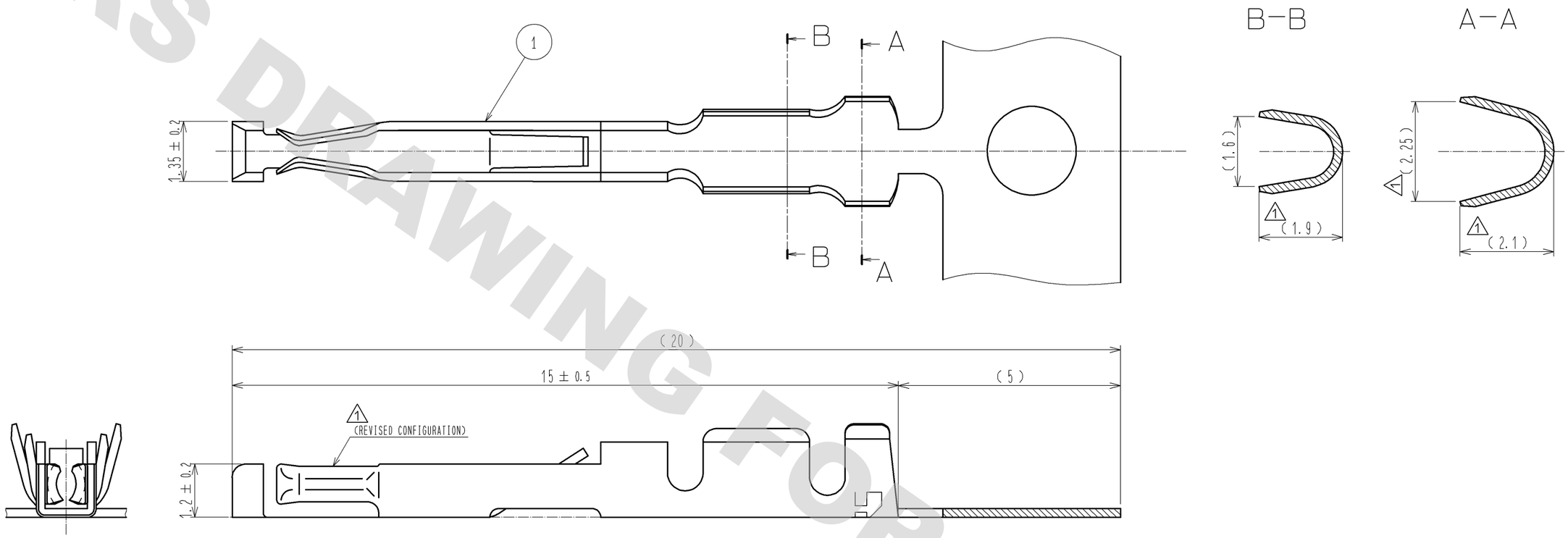

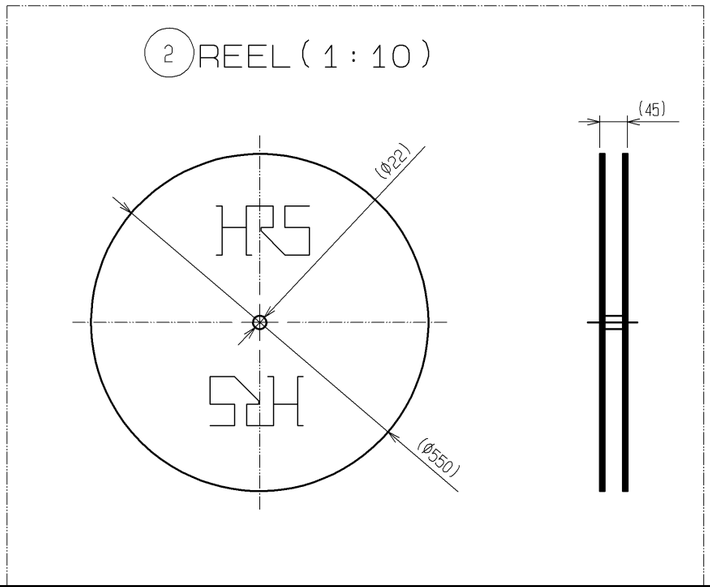

NOTES 1 THIS PRODUCT IS APPLY TO THE WIRE #20 TO #25(WIRE JACKET DIAMETER φ1.7 MAX.)
2 PER REEL:10000 CONTACTS.
3 CONTACT AREA : GOLD PLATING 0.2μm min.
TERMINAL AREA : NICKEL PLATING 2μm min.
UNDER PLATING : NICKEL 2μm min.

NO.	MATERIAL	FINISH , REMARKS	NO.	MATERIAL	FINISH , REMARKS
1	PHOSPHOR BRONZE	3	2	CARTON	(TERMINAL WINDING REEL)

UNITS	SCALE		COUNT	DESCRIPTION OF REVISIONS	DESIGNED	CHECKED	DATE
mm	10 : 1	1	5	DIS-C-001336	DS. MATSUNE	SU. OBARA	09. 06. 17

HRS HIROSE ELECTRIC CO., LTD.

APPROVED	: MO. SATOH	08. 11. 12	DRAWING NO.	EDC3-116077-00
CHECED	: TH. KAMEYA	08. 11. 11	PART NO.	HR34B-SC1-211
DESIGNED	: DS. MATSUNE	08. 11. 11	CODE NO.	CL134-0050-4-00
DRAWN	: DS. MATSUNE	08. 11. 11		1/1

FORM HC0011-5-7