DRAWING FOR REFERENCE: This is subject to change without notice
08/11/2012

HRS DRAWING FOR REFERENCE

	COUNT	DESCRIPTION OF REVISIONS	BY	CHKD	DATE		COUNT	DESCRIPTION OF REVISIONS	BY	CHKD	DATE
△					. .	△					. .
△					. .	△					. .
△					. .	△					. .

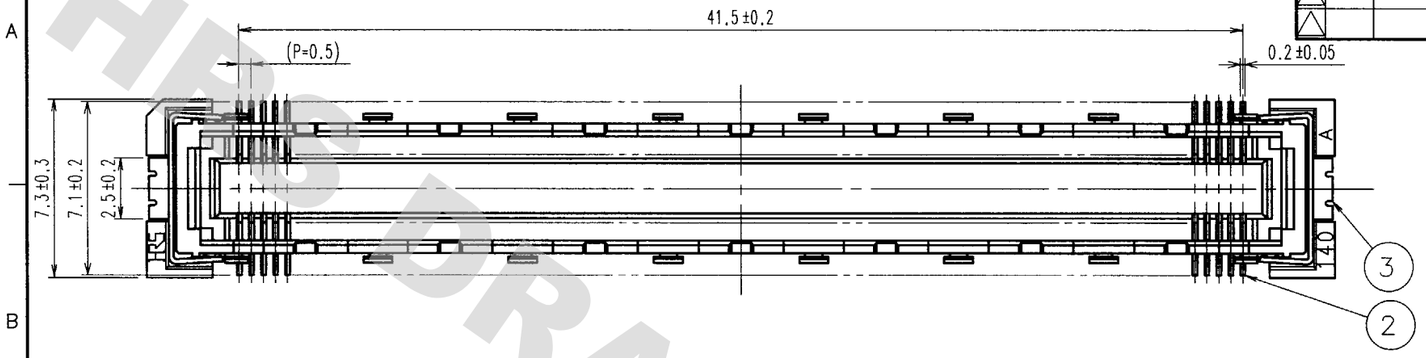

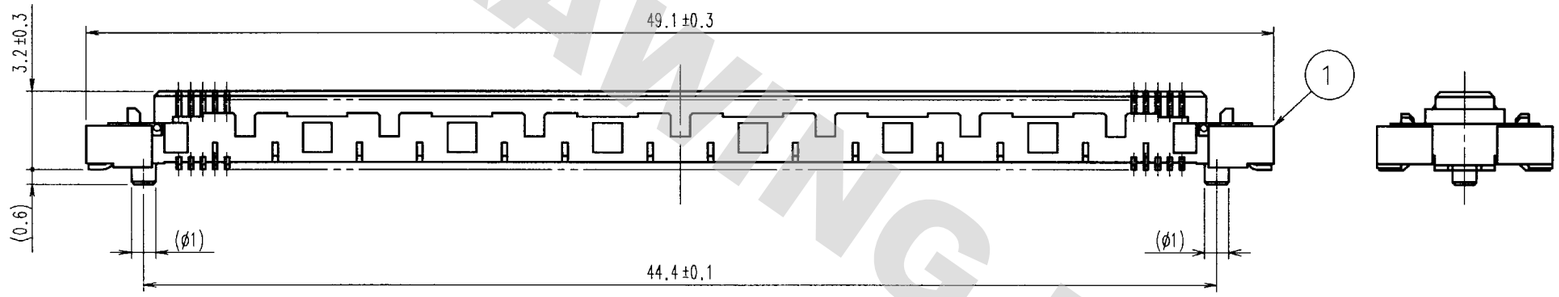

RECOMMENDED LAND PATTERN DIMENSION OF PCB

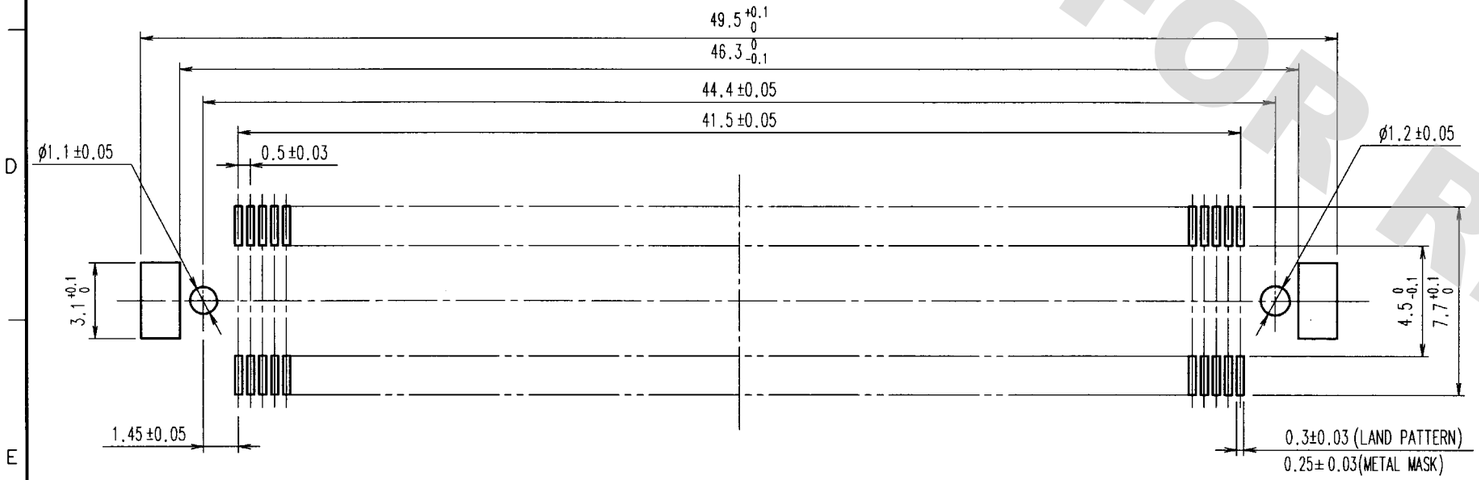

NO.	MATERIAL	FINISH, REMARKS	NO.	MATERIAL	FINISH, REMARKS
2	PHOSPHOR BRONZE	CONTACT AREA:GOLD (0.1μm) OVER NICKEL LEAD:GOLD FLASH OVER NICKEL			
1	LCP	BEIGE UL94V-0	3	PHOSPHOR BRONZE	TIN PLATED

CODE NO.(OLD)	DRAWN	DESIGNED	CHECKED	APPROVED	RELEASED
CL	J Takada 00·01·07	J Takada 00·01·07	M Ishida 00·01·11	J Fujishima 00·01·11	. .

NOTES
1 SMT LEAD-COPLANARITY:0.1 MAX.
2 THIS PRODUCT HAS NO POLARITY TO PATTERN FOR MOUNTING.
3 EMBOSS CARRIER TAPE PACKAGE IS APPLIED ON THIS PRODUCT.
PLEASE REFER TO THE SHEET 2/2 FOR THE DETAILS.

TO
PCK

SCALE 4 : 1
UNITS mm

DRAWING NO. EDC3-151987-01

PART NO. FX10A-168S-SV (21)

HRS HIROSE ELECTRIC CO., LTD

CODE NO. CL570-0244-7-21

1/2

	COUNT	DESCRIPTION OF REVISIONS	BY	CHKD	DATE		COUNT	DESCRIPTION OF REVISIONS	BY	CHKD	DATE
△					. .	△					. .
△					. .	△					. .
△					. .	△					. .

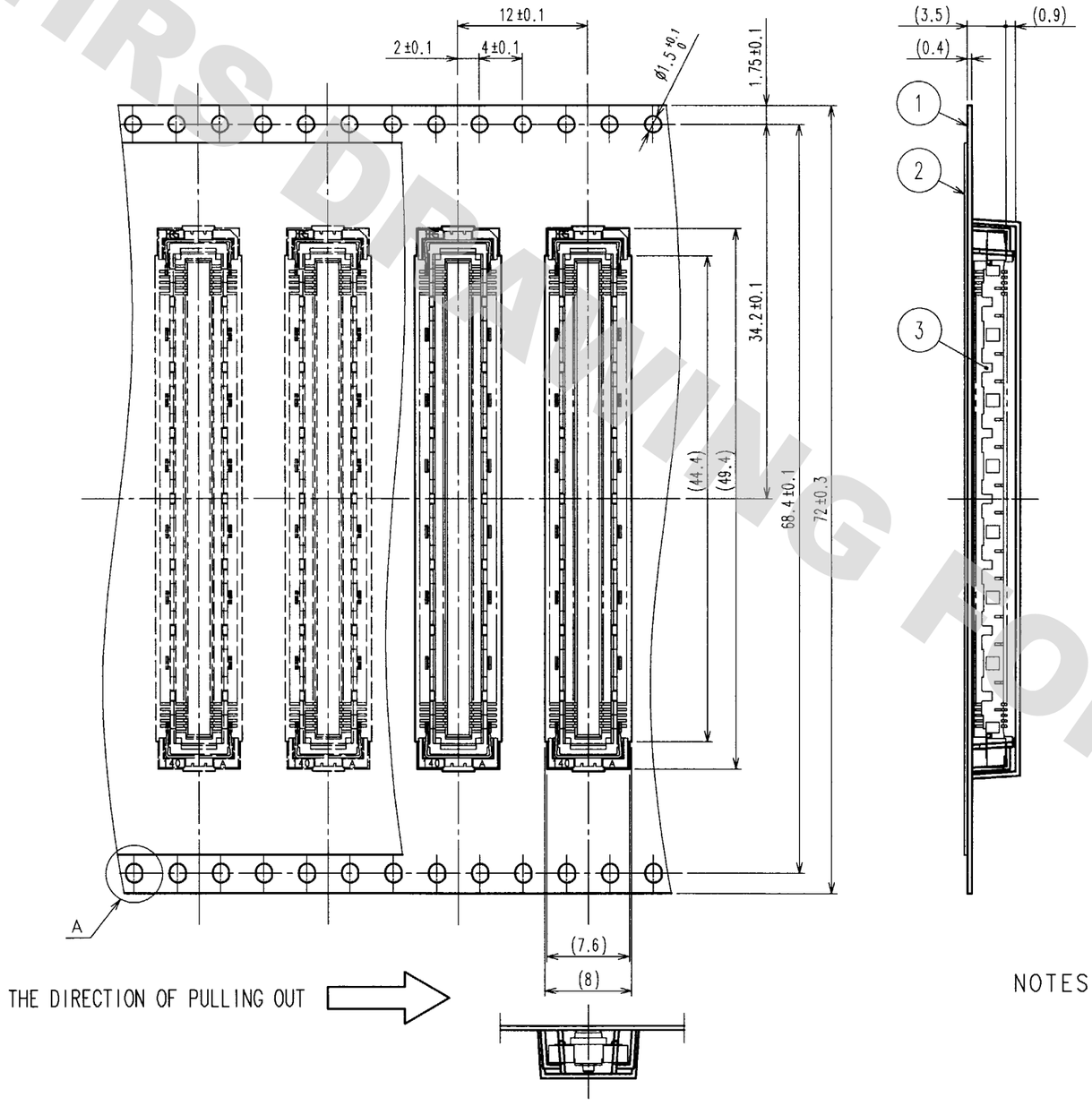

REELED DIMENSION (Free)

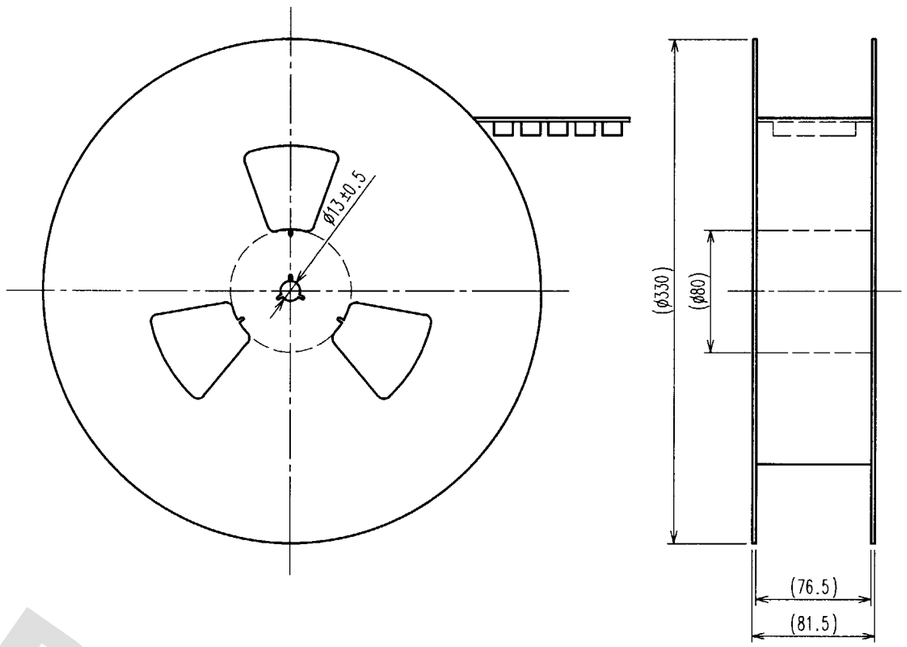

NOTES 1 1REEL:1000 CONNECTORS.
2 MINIMUM 10 COMPARTMENTS FROM BOTH REEL ENDS REMAIN EMPTY.
3 THIS PRODUCT HAS NO POLARITY TO TAPE AND REEL PACKAGING.

A (5:1)

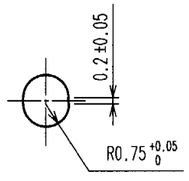

NO.	MATERIAL	FINISH, REMARKS	NO.	MATERIAL	FINISH, REMARKS
2	PET	TOP COVER TAPE			
1	PS	EMBOSSED CARRIER TAPE	3	(CONNECTOR)	

CODE NO.(OLD)	DRAWN	DESIGNED	CHECKED	APPROVED	RELEASED
CL	J Takada 00·01·07	J Takada 00·01·07	M Takeda 00·01·11	Y. Yoshimura 00·01·11	. .
DRAWING FOR PACKING					

SCALE 2 : 1
UNITS mm

DRAWING NO. EDC3-151987-01

PART NO. FX10A-168S-SV(21)

HRS HIROSE ELECTRIC CO., LTD

CODE NO. CL570-0244-7-21

2

TO PCK

DRAWING FOR REFERENCE: This is subject to change without notice
08/11/2012

HRS DRAWING FOR REFERENCE