DRAWING FOR REFERENCE: This is subject to change without notice
08/11/2012

HRS DRAWING FOR REFERENCE

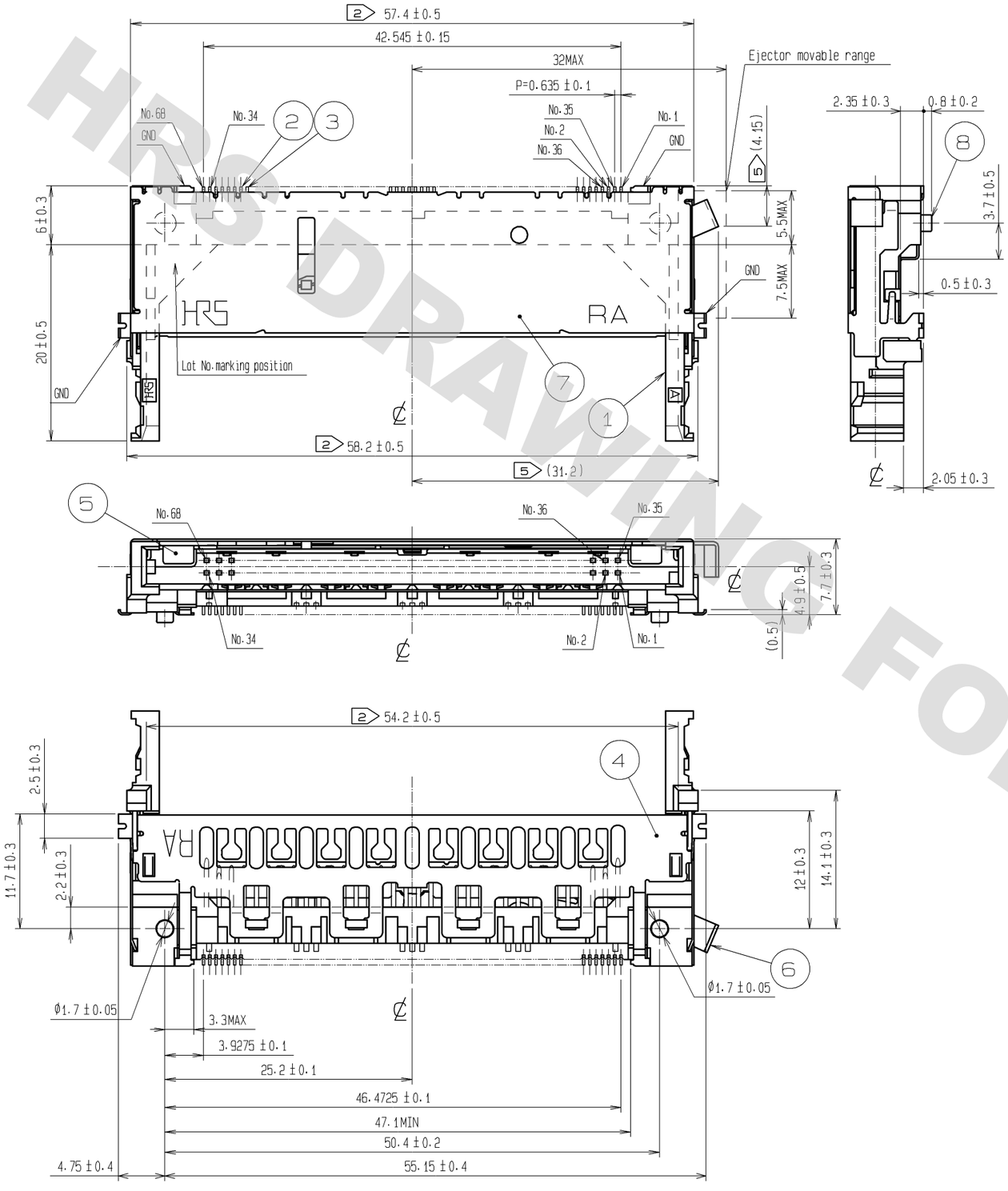

RECOMMENDED LAND PATTERN

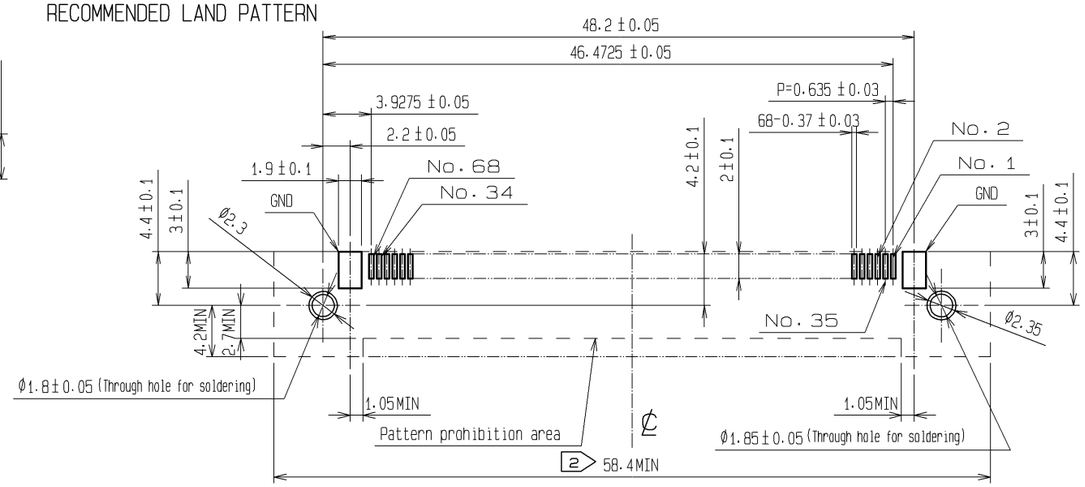

LAND PATTERN DIMENSION OF PWB (ON MOUNTED SIDE)

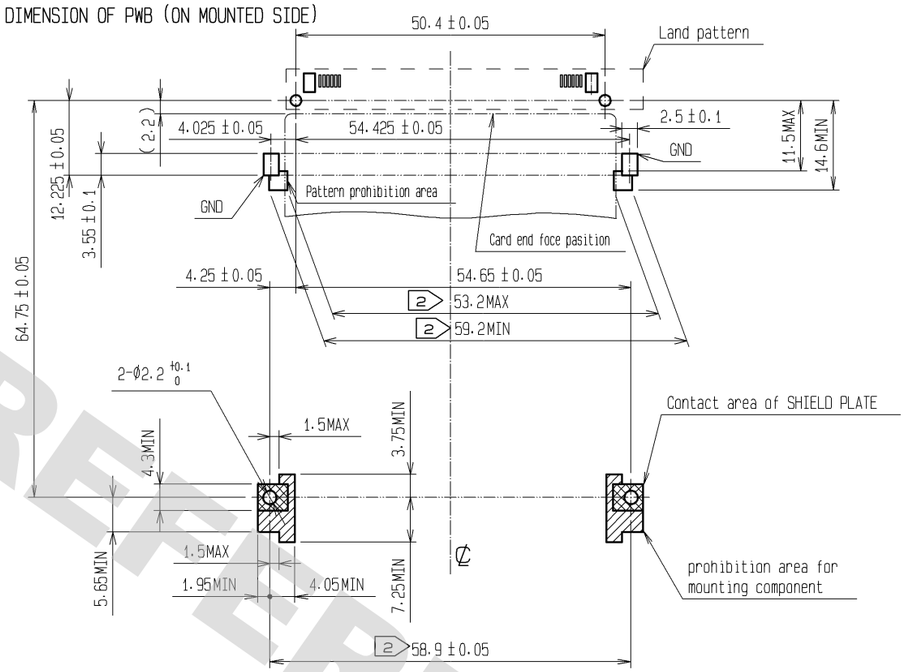

Notes 1 PC card interface dimension corresponds to 「PC Card Standard」.
2 These 7 dimensions are symmetrical for the center line.
3 This product is available in combination with CARD-GUIDE UNIT, 「IC14A-G-*EJR*」.
4 CARD-GUIDE UNIT, 「IC14A-G-*EJR*」to be assembled after mounting this product.
5 These (dimensions) are on delivey. Be sure to check that the fittings are at the position shown on assembling.

NO.	MATERIAL	FINISH, REMARKS	NO.	MATERIAL	FINISH, REMARKS
2, 3	BRASS	CONTACT AREA : Ni1.5μm+Au0.1μm DIP AREA : Ni1.5μm+Sn1μm	8	COPPER ALLOY	Ni1.5μm+Sn1μm
			5, 6	STAINLESS STEEL	
1	PA		4, 7	STAINLESS STEEL	Ni

UNITS	SCALE	COUNT	DESCRIPTION OF REVISIONS	DESIGNED	CHECKED	DATE
mm	2 : 1					

HIROSE ELECTRIC CO., LTD.

APPROVED	: KI. AKIYAMA	08. 03. 03	DRAWING NO.	EDC3-153285-01
CHECED	: SI. TOMIOKA	08. 03. 03	PART NO.	IC14A-PLR-SF-EJR(71)
DESIGNED	: NH. SUGITA	08. 03. 03	CODE NO.	CL640-1307-7-71
DRAWN	: NN. ONDA	08. 02. 25		1/1