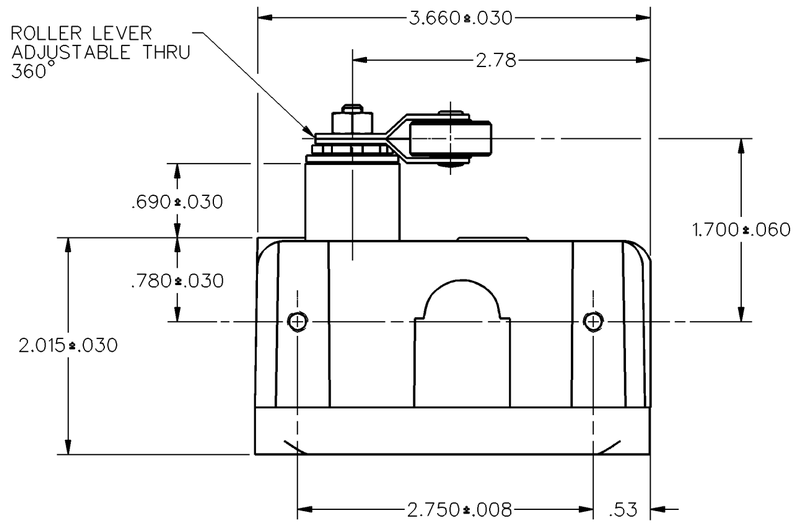

NOTES
1 – EXPLOSION PROOF – UNDERWRITERS LAB INC LISTED FOR HAZARDOUS LOCATIONS NEMA 7, CLASS I, GROUPS C AND D, NEMA 9, CLASS II, GROUPS E, F, AND G
2 – 8X MOUNTING SCREW HOLE, 10–32 UNF THREADS X (.219) DEEP
3 – 8–32 UNC X (.219) TERMINAL SCREWS AND CUPWASHERS
4 - EUROPEAN HAZARDOUS LOCATIONS DESIGNATION: Ex d IIB + H2 T6 CATAGORY II 2 G
5 - SEAL RATING: NEMA 1
6 EXTERNAL GROUND SCREW MAY BE ASSEMBLED TO ANY UNUSED MOUNTING SCREW HOLE
7 ASSEMBLE PROVIDED SPLIT LOCKWASHER BETWEEN GROUND LUG AND HOUSING

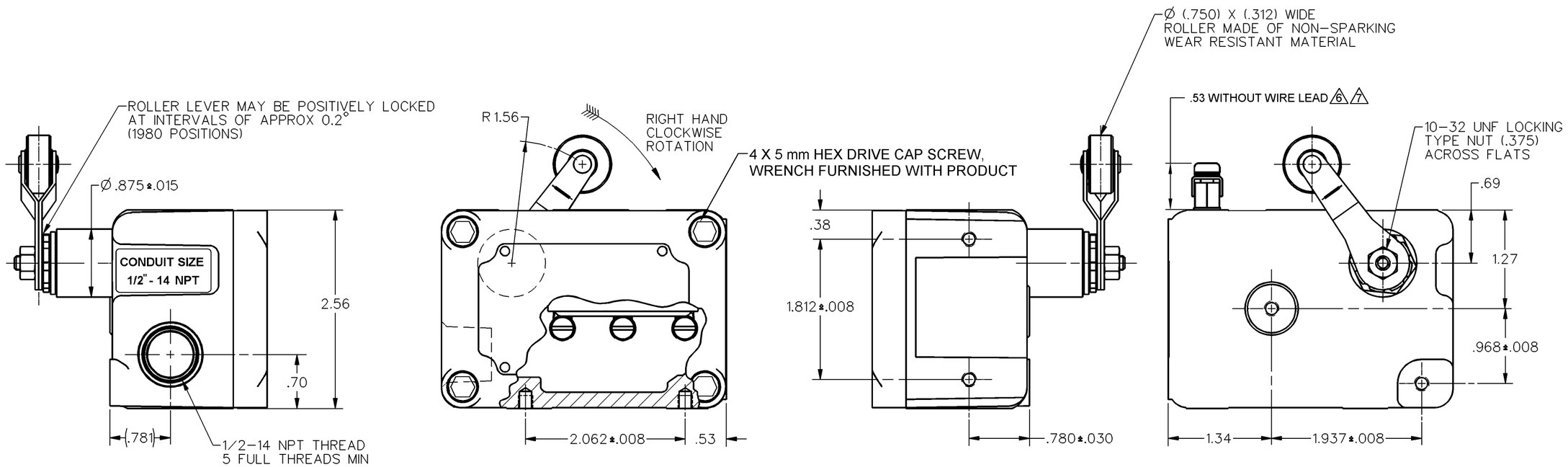

CHARACTERISTICS	ELECTRICAL DATA
OPERATING FORCE – – – – 1/2 – 1 1/4 LB	CONTACT ARRANGEMENT S P D T
RELEASE FORCE – – – – – – – – 1/4 LB MIN	L96
PRETRAVEL – – – – – – – – – .219 MAX 8°	15A 125, 250 OR 480 VAC
DIFFERENTIAL TRAVEL – – – .007 MAX 1/4°	1/8HP 125 VAC, 1/4HP 250 VAC
DO NOT OVERTRAVEL MORE THAN – – – 90°	1/2A 125 VDC, 1/4A 250 VDC
SWITCH – BASIC REPLACEMENT – – – BZ–2R–P4	

MASTER REDUCED
ANSI Y14.5M–1982 APPLIES

THIS DRAWING COVERS A PROPRIETARY ITEM AND IS THE PROPERTY OF MICRO SWITCH. A DIVISION OF HONEYWELL. THIS DRAWING IS NOT TO BE COPIED OR USED WITHOUT THE APPROVAL OF MICRO SWITCH.

MICRO SWITCH a Honeywell Division
FED. MFG. CODE 91929

SWITCH – ENCLOSED

CATALOG LISTING
EX–AR141

THIRD ANGLE PROJECTION
SCALE FULL
DO NOT SCALE PRINT

UNLESS OTHERWISE SPECIFIED TOLERANCES ARE

ONE PLACE	(.0)	±.030
TWO PLACES	(.00)	±.015
THREE PLACES	(.000)	±.005
ANGLES		±

WEIGHT

EX–AR141
DRAWING NUMBER M
ISSUE 34
RELEASE NO. PR–19685
REPLACES

REVISIONS
A C073019 MAM 19 SEP 92
B 0012750 KR 25APR05
C 0068804 MBN 27AUG10

DRAWN	CHECK	CHECK	CHECK	CHECK
MAM 6 DEC 91	TSM 11 DEC 91	CMH 27AUG10		

RASTER