MICRO SWITCH
A DIVISION OF MINNEAPOLIS-HONEYWELL REGULATOR COMPANY
FREEPORT, ILLINOIS
FED. MFR. CODE 91929

SWITCH-ENCLOSED

CATALOG LISTING
EX-AR50

THIS DRAWING COVERS A PROPRIETARY ITEM AND IS THE PROPERTY OF MICRO SWITCH. A DIVISION OF HONEYWELL. THIS DRAWING IS NOT TO BE COPIED OR USED WITHOUT THE APPROVAL OF MICRO SWITCH.

(M) EX-AR50 ISSUE 2 REPLACES
EX-AR50 RELEASE NO. M DRAWING NUMBER
ISSUE 13 14 15 CHECK

REVISIONS
K CO 707158
TSM 10 OCT 91
L C073019
MAM 19 SEP 92
M 0012750
SPK 27APR05
N 0068804
MBN 27AUG10

DRAWN K. A. F. 7 FEB. 57 CHECK 27AUG10 CMH CHECK

RASTER FO-50376.003

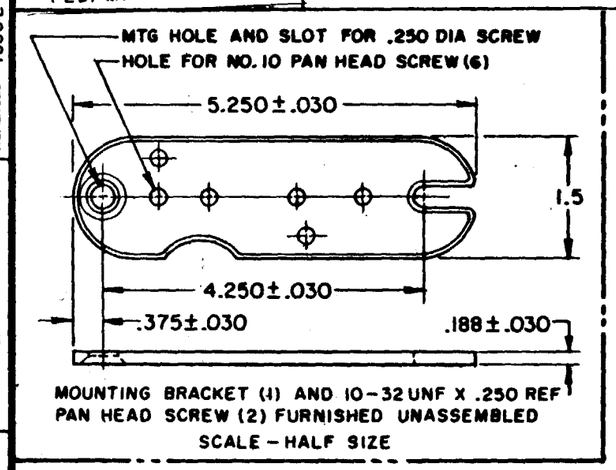

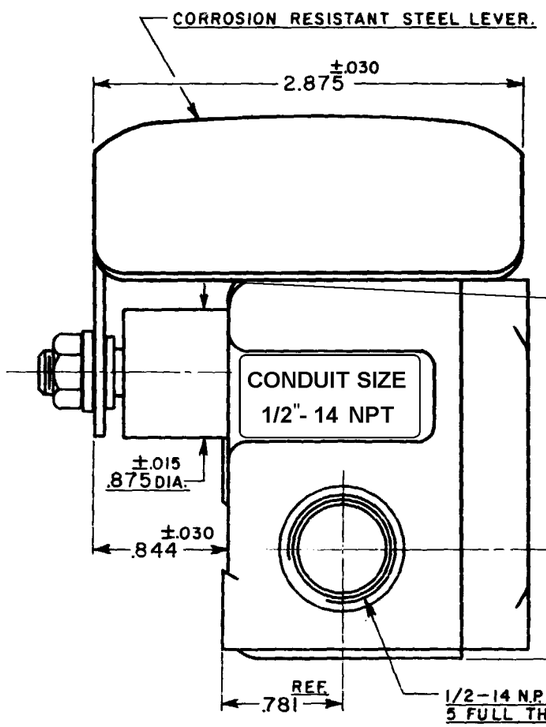

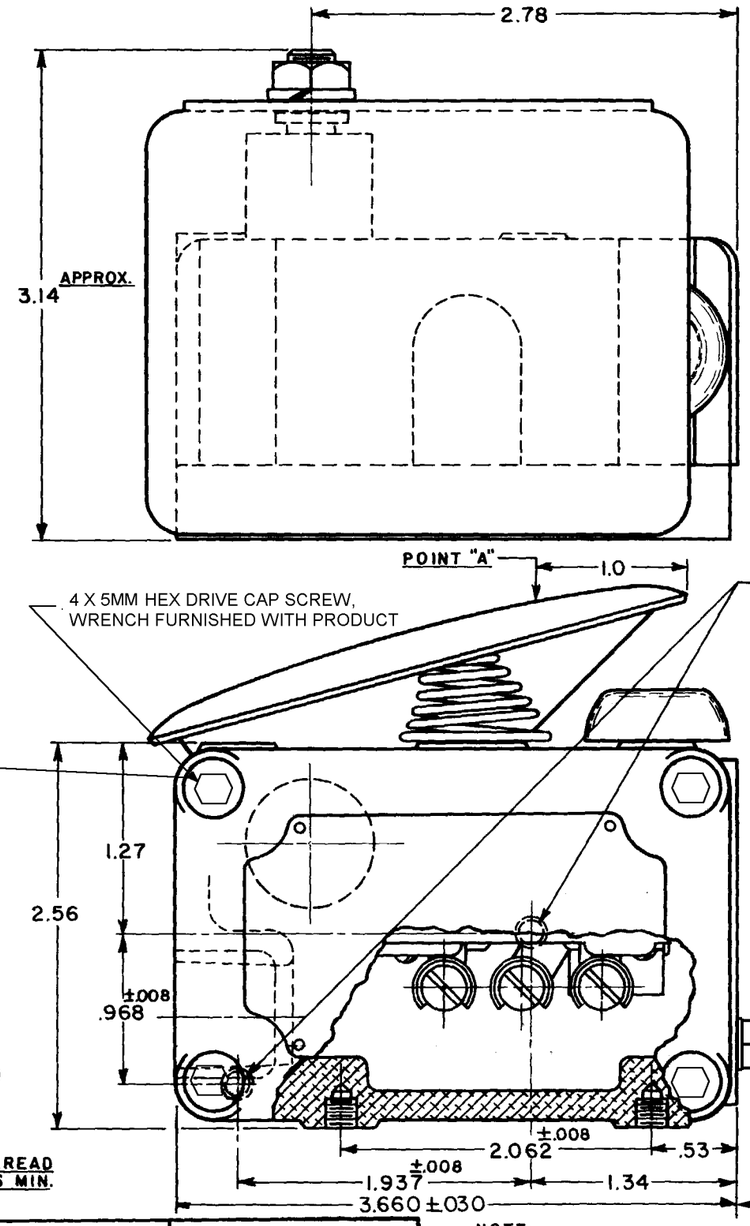

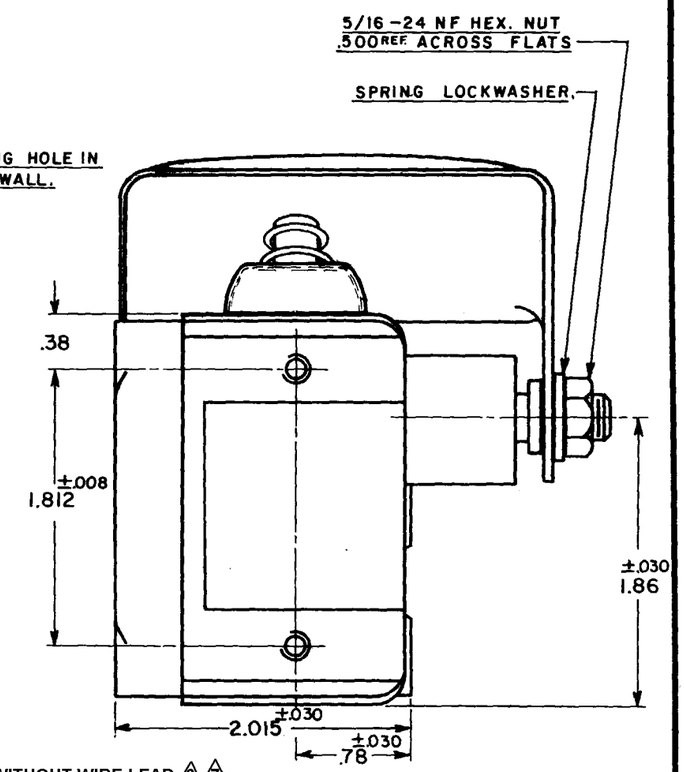

CHARACTERISTICS (AT POINT "A")	ELECTRICAL DATA	SCALE — FULL
OPERATING FORCE — — 2 1/2 LBS. APPROX.	CONTACT ARRANGEMENT S. P. D. T.	DO NOT SCALE PRINT
DIFFERENTIAL TRAVEL — — .003 APPROX.	-L96- 15 A-125, 250, OR 480 VAC; 1/2 A-125 VDC; 1/4 A-250 VDC; 1/8 HP-125 VAC, 1/4 HP-250 VAC	UNLESS OTHERWISE SPECIFIED DIMENSIONS ARE IN INCHES
OVERTRAVEL — — — — — — .125 MIN.		TOLERANCES ARE: ONE PLACE (.0) ±.030; TWO PLACE (.00) ±.015; THREE PLACE (.000) ±.005; ANGLES ±
SWITCH - BASIC REPLACEMENT - BZ-2R-P4		WEIGHT

NOTE-

1-(6) MOUNTING SCREW HOLES, 10-32 NF-2B THREADS X .219 REF DEEP.
2-(8)-32 NC X .219 REF TERMINAL SCREWS AND CUPWASHERS.
3-EXPLOSION PROOF - UNDERWRITERS LAB. INC. LISTED FOR HAZARDOUS LOCATIONS NEMA 7, CLASS I, GROUP C AND D, NEMA 9, CLASS II, GROUPS E, F AND G.

4 - EUROPEAN HAZARDOUS LOCATIONS DESIGNATION: Ex dIIB + H2 T6 CATAGORY II 2 G
5 - SEAL RATING : NEMA 1
6 - EXTERNAL GROUND SCREW MAY BE ASSEMBLED TO ANY UNUSED MOUNTING SCREW HOLE
7 - ASSEMBLE PROVIDED SPLIT LOCKWASHER BETWEEN GROUND LUG AND HOUSING