MICRO SWITCH
FREEPORT ILLINOIS U S A
A DIVISION OF HONEYWELL
FED. MFG. CODE 91929

SWITCH – ENCLOSED

CATALOG LISTING
EXHT–AR403

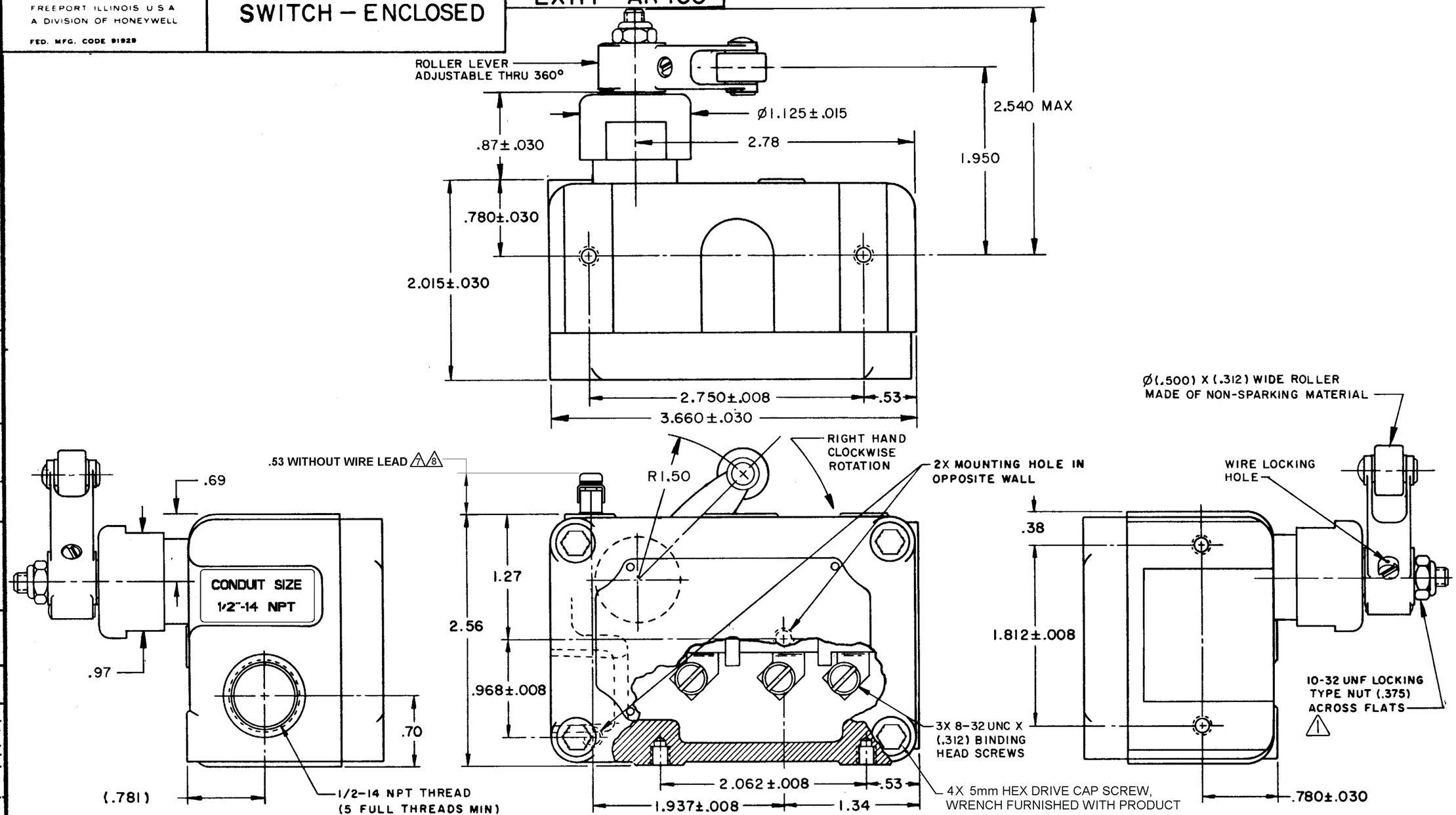

REPLACES	X64691-EXHT		
RELEASE NO.	PR-6318-T		
DRAWING NUMBER	M	EXHT–AR403	
ISSUE	8	29NOV12	CMH

REVISIONS

A	C058360	CJH 18 NOV 85	26APR05
B	C061381	DAW 24 APR 87	
C	C073019	MAW 19 SEP 92	AK
D	0012750	KSR 26APR05	
E	0025387	BNA 10OCT06	11 APR 77
F	0070470	SJK 18OCT10	
G	0096107	DJS 29NOV12	

CHECK	CEB	23 MAR 77
DRAWN	J A L	

FO-52851-A

THIS DRAWING COVERS A PROPRIETARY ITEM AND IS THE PROPERTY OF MICRO SWITCH, A DIVISION OF HONEYWELL. THIS DRAWING IS NOT TO BE COPIED OR USED WITHOUT THE APPROVAL OF MICRO SWITCH.

THIRD ANGLE PROJECTION

SCALE FULL

DO NOT SCALE PRINT

TOLERANCES
APPLY TO DESIGN UNITS. CONVERSIONS ARE ONLY FOR REFERENCE. UNLESS NOTED, TOLERANCES ARE ±

	DIM. mm	TOL. mm/in	DIM. in	TOL. mm/in
NO PLACES	X	1/.04		
ONE PLACE	X.X	0.4/.016	X.X	0.8/.03
TWO PLACES	X.XX	0.15/.006	X.XX	0.38/.015
THREE PLACES			X.XXX	0.13/.005
ANGLES				

DESIGN UNITS SI METRIC ☐ US CUSTOMARY ■

RAW MATERIAL–COMMERCIAL STANDARD
MICRO SWITCH STANDARDS APPLY

DIMENSIONS ARE TO BE MET BEFORE PROTECTIVE COATINGS ARE APPLIED

WEIGHT

CHARACTERISTICS

OPERATING FORCE – – – – – – – – 12–32 OZ

RELEASE FORCE – – – – – – – – 5 OZ MIN

PRETRAVEL – – – – – – – – – .219 MAX (8°)

DIFFERENTIAL TRAVEL – – – – – .016 MAX

DO NOT OVERTRAVEL MORE THAN 25°

SWITCH–BASIC REPLACEMENT – – – – 2HT28

ELECTRICAL DATA

CONTACT ARRANGEMENT

S P D T

CODE L110 , 3A–125 OR 250VAC
1/10HP–125VAC; 1/6HP–250VAC

NOTES

1. DO NOT APPLY MORE THAN 20-25 INCH POUNDS TORQUE WHEN TIGHTENING LOCK NUT
2 - (8) MOUNTING SCREW HOLES, 10-32 NF-2B THREADS X .219 REF DEEP
3 - LEVER PACKAGED SEPARATELY WITH SWITCH
4 - EXPLOSION PROOF-UNDERWRITERS LAB. INC. LISTED FOR HAZARDOUS LOCATIONS NEMA 7, CLASS I, GROUPS C AND D, NEMA 9, CLASS II GROUPS E, F AND G
5 – ALUMINUM ENCLOSURE (UNPAINTED)
6 - SEAL RATING: NEMA 1
7 - EXTERNAL GROUND SCREW MAY BE ASSEMBLED TO ANY UNUSED MOUNTING SCREW HOLE
8 - ASSEMBLE PROVIDED SPLIT LOCKWASHER BETWEEN GROND LUG AND HOUSING
9 - EUROPEAN HAZARDOUS LOCATIONS DESIGNATION: Ex d IIB + H2 T2 CATAGORY II 2 G
10 - SWITCH WILL WITHSTAND TEMPERATURE OF 400°F FOR 100 HOURS

RASTER