CONTACTS FOR FLR AND FLK-CABLE
Kontakte fuer FLR und FLK-Leitung

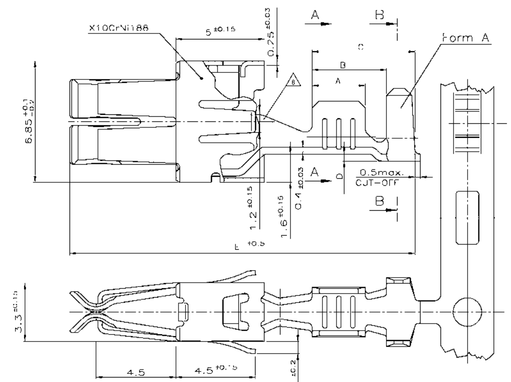

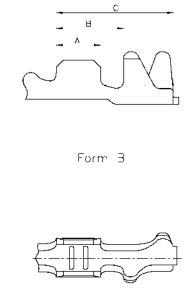

CONTACTS FOR SINGLE WIRE SEALING SYSTEM: FLR- AND FLK-CABLE
Kontakte fuer Einzel Dichtung System: FLR und FLK Leitung

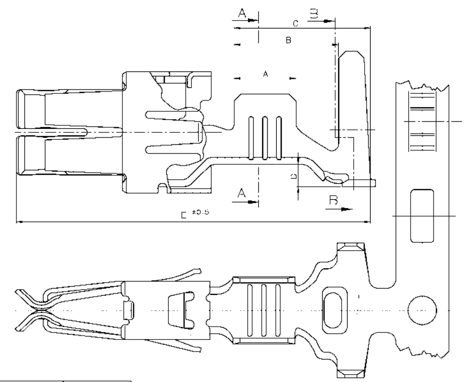

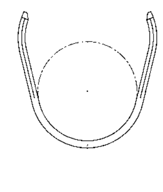

SECTION B-B
Schnitt B-B

ONLY FOR PN: 968035, 968037 and 1570426
Nur fuer PN:

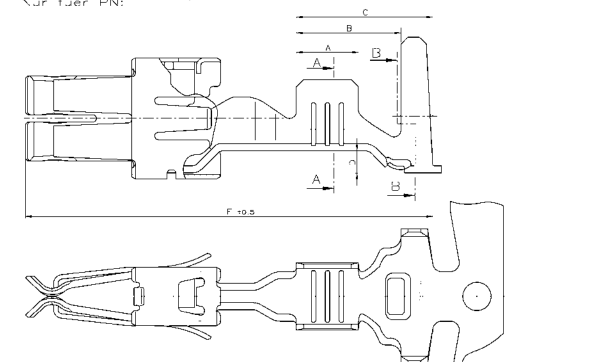

Dimensions see Figure Contacts for FLR – Cable
Masse siehe Darstellung der Kontakte fuer FLR-Leitung

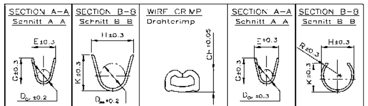

ORDER NO. BESTELL- NR. STRIP BANDWARE	Rev.	ORDER NO. BESTELL- NR. LOOSE PIECE Einzelausfuehrung	WIRE RANGE Drahtgroessen Bereich (mm²)	INSULATION Ø Isolations Ø (mm)	MATERIAL Werkstoff	SURFACE Oberflaeche	LENGTH Laenge	STRIP (Bandware) WIRE CRIMP Drahtcrimp	STRIP (Bandware) FORM INSUL.-CRIMP Isol.-Crimp	CRIMP HEIGHT Crimp-Hoehe	LOOSE PIECE (Einzelausfuehrung) WIRE CRIMP Drahtcrimp	LOOSE PIECE (Einzelausfuehrung) INSUL.-CRIMP Isol.-Crimp
1-1670426-6	A	1-1670427-6	>4.0–6.0 INCL. AWG 10	3.6–5.1 6.0 (SEAL)	CuNiSi	△7	A = 4.3 B = 6.5 C = 8.3 D = 1.45 E = 20.0	E = 5.3 G = 5.6 D_o = 2.9	H = 8.15 K = 8.0 D_{io} = 6.0	5.0mm² = 2.36 6.0mm² = 2.55 PRELIMINARY vor oeufig	E = 5.3 G = 5.6 D_o = 2.9	
2-968037-4	A	2-968038-4	>2.5–4.0	3.4–3.7 △2	CuSn4	△5	A = 4.0 B = 5.9 C = 7.7 D = 1.25 E = 23.0	E = 4.6 G = 4.8 D_o = 2.4	H = 7.6 K = 7.7 D_{io} = 5.6	4.0mm² = 2.35 3.0mm² = 2.13 –	E = 3.6 G = 4.95 D_o = 1.7	H = 7.0 K = 6.9 R = 4.1
1-968037-4	A	1-968038-4			CuFe2	sel.Gold △3						
0-968037-2	A	0-968038-2			CuSn4	vorverzinnt						
2-968035-4	A	2-968036-4	>1.0–2.5	2.7–3.7 △2	CuSn4	–	A = 3.5 B = 5.9 C = 7.7 D = 1.25 F = 23.0	E = 3.8 G = 4.1 D_o = 1.6	H = 7.6 K = 7.7 D_{io} = 5.6	1.5mm² = 1.76 2.0mm² = 1.90 2.5mm² = 2.04	E = 3.1 G = 4.2 D_o = 2.4	H = 7.0 K = 6.9 D_{io} = 4.1
0-968035-2	A	0-968036-2			CuSn4	vorverzinnt						
–	–	–	>2.5–4.0	3.4–4.5 △2	–	–	A = 4.0 B = 5.9 C = 7.7 D = 1.25 E = 20.0	E = 4.6 G = 4.8 D_o = 2.4	H = 7.8 K = 7.8 D_{io} = 5.7	3.0mm² = 2.13 4.00mm² = 2.35 –	E = 3.6 G = 4.93 D_o = 2.3	H = 7.5 K = 6.8 D_{io} = 4.6
1-964334-5	A	1-964333-5			CuFe2	△6						
1-964334-1	A	1-964333-1			CuFe2	vorverzinnt						
1-964332-5	A	1-964331-5	>1.0–2.5	2.2–3.7 △2	CuFe2	△6	A = 3.5 B = 5.9 C = 7.7 D = 1.25 E = 20.0	E = 3.8 G = 4.0 D_o = 1.7	H = 7.8 K = 7.8 D_{io} = 5.7	1.5mm² = 1.76 2.0mm² = 1.90 2.5mm² = 2.04	E = 3.1 G = 4.2 D_o = 1.7	H = 7.5 K = 6.8 D_{io} = 4.6
964332-5	A	964331-5			CuFe2	△4						
1-964332-2	A	1-964331-2			CuFe2	sel.Gold △3						
1-964332-1	A	1-964331-1			CuFe2	vorverzinnt						
–	–	–	0.5–1.0	1.4–2.7 △2	–	–	A = 3.0 B = 5.4 C = 7.2 D = 1.25 E = 20.0	E = 2.8 G = 3.0 D_o = 1.1	H = 7.7 K = 7.7 D_{io} = 5.5	0.5mm² = 1.43 0.75mm² = 1.52 1.0mm² = 1.61	E = 2.2 G = 3.1 D_o = 1.1	H = 7.0 K = 6.8 D_{io} = 4.1
1-964330-2	A	964329-2			CuFe2	sel.Gold △3						
1-964330-1	A	964329-1			CuFe2	vorverzinnt						
1-969044-5	A	1-969045-5	>2.5–4.0	3.4–4.5 △2	CuFe2	△6	A = 4.0 B = 5.9 C = 7.7 D = 1.45 E = 20.0	E = 4.6 G = 4.8 D_o = 2.4	H = 8.15 K = 8.0 D_{io} = 6.0	4.00mm² = 2.35 –	E = 3.6 G = 4.93 D_o = 2.3	H = 7.5 K = 6.8 D_{io} = 4.6
969044-5	A	969045-5			CuFe2	△4						
969044-1	A	969045-1			CuFe2	vorverzinnt						
			>1.0–2.5	2.2–3.7 △2			A = 3.5 B = 5.9 C = 7.7 D = 1.45 E = 20.0	E = 3.8 G = 4.0 D_o = 1.7	H = 8.15 K = 8.0 D_{io} = 5.7	2.5mm² = 2.04 2.0mm² = 1.90 1.5mm² = 1.76	E = 3.1 G = 4.2 D_o = 1.7	H = 7.5 K = 6.8 D_{io} = 4.6
969042-1	A	969043-1			CuFe2	vorverzinnt						
–	–	–	0.5–1.0	1.4–2.7 △2	–	–	A = 3.0 B = 5.4 C = 7.2 D = 1.35 E = 20.0	E = 2.8 G = 3.0 D_o = 1.1	H = 7.85 K = 7.7 D_{io} = 5.5	1.0mm² = 1.61 0.75mm² = 1.52 0.5mm² = 1.43	E = 2.2 G = 3.1 D_o = 1.1	H = 7.0 K = 6.8 D_{io} = 4.1
–	–	–			–	–						
969040-1	A	969041-1			CuFe2	vorverzinnt						
–	–	–	>2.5–4.0	3.3–4.5	–	–	A = 4.0 B = 5.2 C = 6.8 D = 0.6 F = 19.5	E = 4.6 G = 4.8 D_o = 2.4	H = 6.4 K = 6.7 D_{io} = 4.0 Form A	3.0mm² = 2.13 3.5mm² = 2.24 4.00mm² = 2.35	E = 3.6 G = 4.95 D_o = 2.3	H = 5.5 K = 5.7 D_{io} = 3.1
964328-5	A	964327-5			CuFe2	△4						
964328-1	A	964327-1			CuFe2	vorverzinnt						
(A4)964326-5	B	964325-5	>1.0–2.5	2.2–3.0	CuFe2	△7	A = 3.5 B = 4.7 C = 6.3 D = 0.4 E = 19.5	E = 3.8 G = 4.0 D_o = 1.7	H = 4.7 K = 4.9 D_{io} = 2.6 Form A	1.5mm² = 1.76 2.0mm² = 1.90 2.5mm² = 2.04	E = 3.1 G = 4.2 D_o = 1.7	H = 3.8 K = 4.4 D_{io} = 2.3
964326-1	B	964325-1			CuFe2	vorverzinnt						
–	–	–	0.5–1.0	1.4–2.1	–	–	A = 3.0 B = 4.2 C = 5.8 D = 0.4 F = 19.5	E = 2.8 G = 3.0 D_o = 1.1	H = 3.8 K = 4.1 D_{io} = 1.8 Form A	0.5mm² = 1.43 0.75mm² = 1.52 1.0mm² = 1.61	E = 2.2 G = 3.1 D_o = 1.1	H = 3.1 K = 3.7 D_{io} = 1.8
–	–	–			–	–						
964324-1	A	964323-1			CuFe2	vorverzinnt						
–	–	–	0.2–0.5	1.15–1.6	–	–	A = 2.5 B = 3.8 C = 6.6 D = 0.3 E = 19.5	L = 2.2 G = 2.2 D_o = 0.8	H = 3.1 K = 3.1 D_{io} = 1.4 Form B	0.2mm² = 1.13 0.25mm² = 1.15 0.35mm² = 1.19 0.5mm² = 1.26	L = 2.0 G = 2.3 D_o = 0.8	H = 2.5 K = 2.7 D_{io} = 1.4
964322-1	A	964321-1			CuFe2	vorverzinnt						

CRIMP DIMENSIONS (mm) / Crimpabmessungen (mm)

	FLR-CABLE / Leitung	FLR/FLK	SINGLE WIRE SEALING SYSTEM EDS △1
ORDER NO. BESTELL- NR. TOOL INSERT Handzange/Matrize LOOSE PIECE fuer Einzelausfuehrung	CERTILOCK: HAND TOOL (Handzange) 169400-0; INSERT (Matrize) 539615-1		CERTILOCK: HAND TOOL (Handzange) 169400-1; INSERT (Matrize) 539616-1
	ERGOCRIMP: HAND TOOL (Handzange) 539635-1; INSERT (Matrize) 539665-2		ERGOCRIMP: HAND TOOL (Handzange) 539635-1; INSERT (Matrize) 539666-2
ORDER NO. BESTELL- NR. EXTRACTION TOOL Ausdrueckwerkzeug	968107-1		
CRIMP DATA AND CRIMP TOOL Crimpdaten u. Crimpwerkzeuge	SEE APPLICATION SPECIFICATION siehe Verarbeitungsspezifikation 114-18037		

ONLY FOR PN: 964330, 964332, 964334, 968035 and 968037
Nur fuer PN:

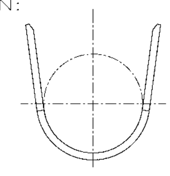

SECTION B-B
Schnitt B-B

CARRIER STRIP
Traegerstreifer

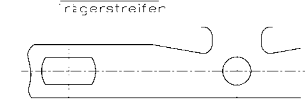

NOTES
Bemerkungen

△1 ACCORDING INSULATION Ø IS TO CHOOSE THE SINGLE WIRE SEAL. ATTENTION: DIFFERENT HOUSING CAVITY DIAMETER ARE POSSIBLE, PLEASE NOTICE APPROPRIATE HOUSING PRODUCT SPECIFICATION!
Entsprechend dem Isolationsdurchmesser ist die Einzel-Dichtung auszuwaehlen.
Achtung: Verschiedene Gehaeuse-Kammer-Durchmesser moeglich, bitte entsprechende Gehaeuse Produkt Spezifikation beachten!

△2 ADDITIONAL CUSTOMER-SPECIFIC SEAL EXISTING
Weitere kundenspezifische Einzeldichtung vorhanden

△3 BODY ELECTRO TIN PLATED OVER NICKEL 0.2 µm min.
Kontaktkoerper galv. verzinnt ueber Nickel
CONTACT AREA SELECTIV GOLD OVER NICKEL 0.8 µm min.
Kontaktzone selectiv vergoldet ueber Ni
WIRE CRIMP AREA ELECTRO TIN PLATED OVER NICKEL 1 µm min.
Drahtcrimpbereich galv. verzinnt ueber Nickel

△4 CONTACT ZONE SELECTIVE PRE SILVER PLATED MIN.1–1.5µm
Kontaktzone selektiv vorversilbert min. 1–1.5µm

△5 CONTACT BODY: ELECTRO TIN PLATED OVER NICKEL 0.2 µm min.
Kontaktkoerper: galv. verzinnt ueber Nickel
TOUCHING AREA TO CANTILEVER SPRING: SELECTIVE AU PLATED OVER NICKEL 0.8 µm min.
Anlageflaeche zur Ueberfeder: selektiv Au ueber Ni beschichtet
CANTILEVER SPRING: COMPLETELY AU PLATED 0.6 µm min.
Ueberfeder: komplett Au beschichtet

△6 CONTACT ZONE SELECTIVE PRE SILVER PLATED MIN.3–4.5µm
Kontaktzone selektiv vorversilbert min. 3–4.5µm

△7 1–3µm Sn28M LAYER FOR HIGHER TEMPERATURE REQUIREMENTS
1–3µm Sn28M Schicht fuer hoehere Temperaturanforderungen

△8 TRANSITION ONLY FOR PN 964325 AND 964326
Uebergang nur fuer PN 964325 und 964326

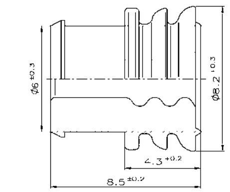

SINGLE WIRE SEAL Einzel-Dichtung △1		
963245-1	3.4–3.7	YELLOW gelb
963244-1	2.2–3.0	WHITE weiß
963243-1	1.2–2.1	BLUE blau
100132-1	DEAD END PLUG	BLACK schwarz
967011-1	3.6–4.3	GREEN gruen
968043-1	4.3–5.1	RED rot
ORDER NO. BESTELL- NR.	INSULATION Ø Isolations Ø	COLOUR Farbe

CUSTOMER PART NO	AMP PART NO	REV.	PCS.	MATERIAL	SURFACE COLOR	DESCRIPTION	ITEM NO
-	-	-	-	-	-	-	-
-	-	-	-	-	-	-	-
-	-	-	-	-	-	-	-
-	-	-	-	-	-	siehe Tabelle	-

± 0.2mm

Tyco Electronics