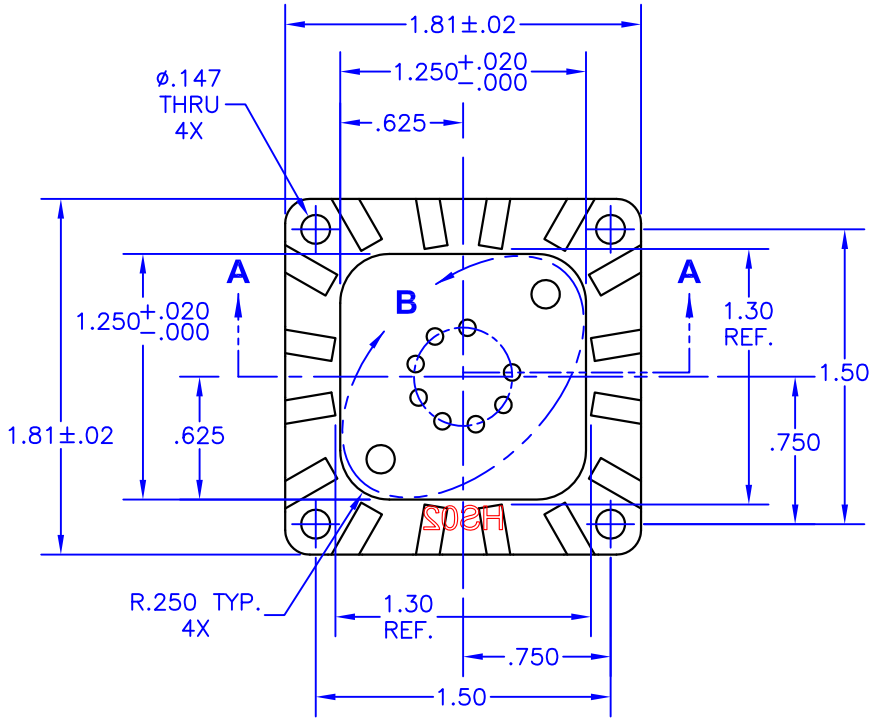

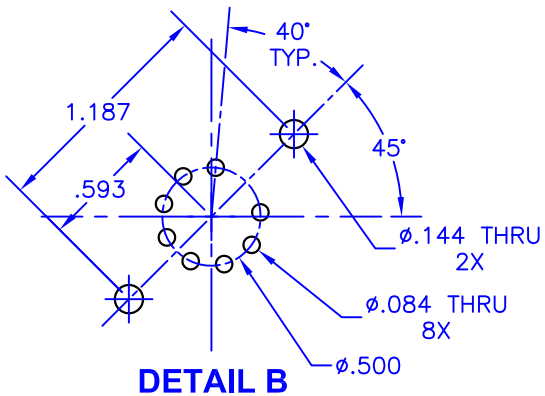

DETAIL B
SCALE 1:1

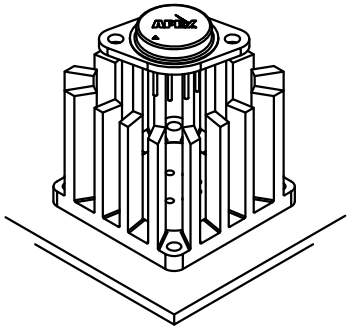

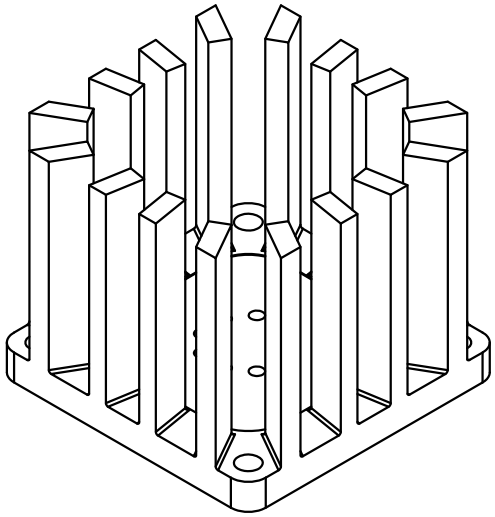

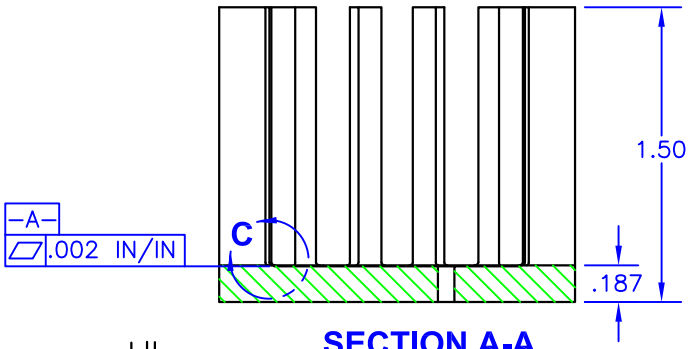

SECTION A-A

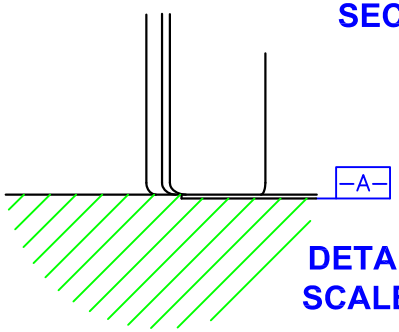

DETAIL C
SCALE 4:1

NOTES:

1. Unless otherwise noted, all dimensions are in inches.
2. Break all sharp edges, de−burr & remove loose chips.
3. Material: Aluminum (M/F AAVID Thermalloy 5684 stamping blank)
4. Machine 1.25x1.25 area of surface −A− flat to within .002 in/in.
5. Finish: Anodize per MIL−A−8625, Type II, Class 2, Black
   Typical breakdown voltage > 300V
6. Mark with contrasting ink as shown, if specified by P.O.
7. Approximate Weight: 1.9 oz [54g]

TOLERANCES - UNLESS OTHERWISE SPECIFIED .XX = ±.05 [.002] .XXX = ±.005 [.0002] ANG. = ±2°	APEX MICROTECHNOLOGY PRECISION • POWER • ANALOG	TITLE: HEATSINK, TO-3				MODEL: HS02	
		SUBJECT: MECHANICAL DRAWING					
		ENGINEER: D-M	DRAWN BY: P.ECK	DCA: 12434	SHL 1 OF 1	FILENAME: HS02	REV: K / DATE: 14NOV12