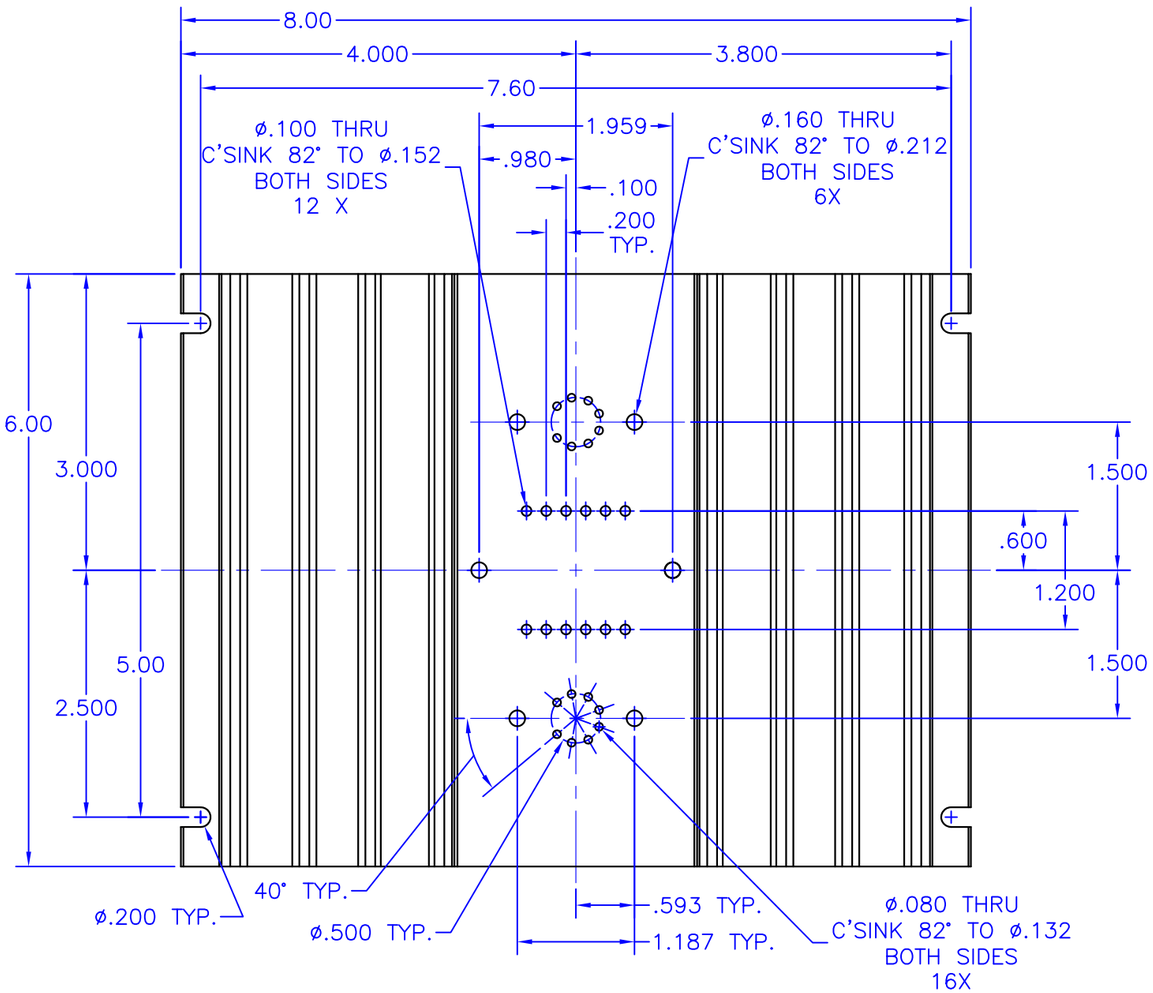

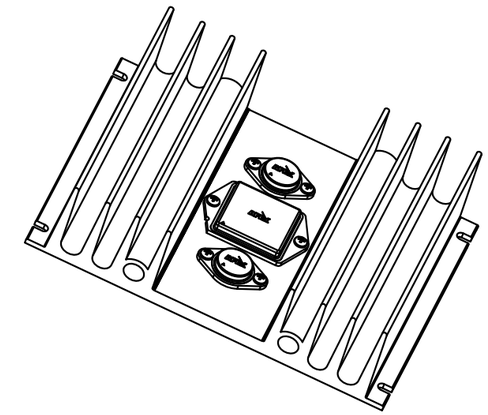

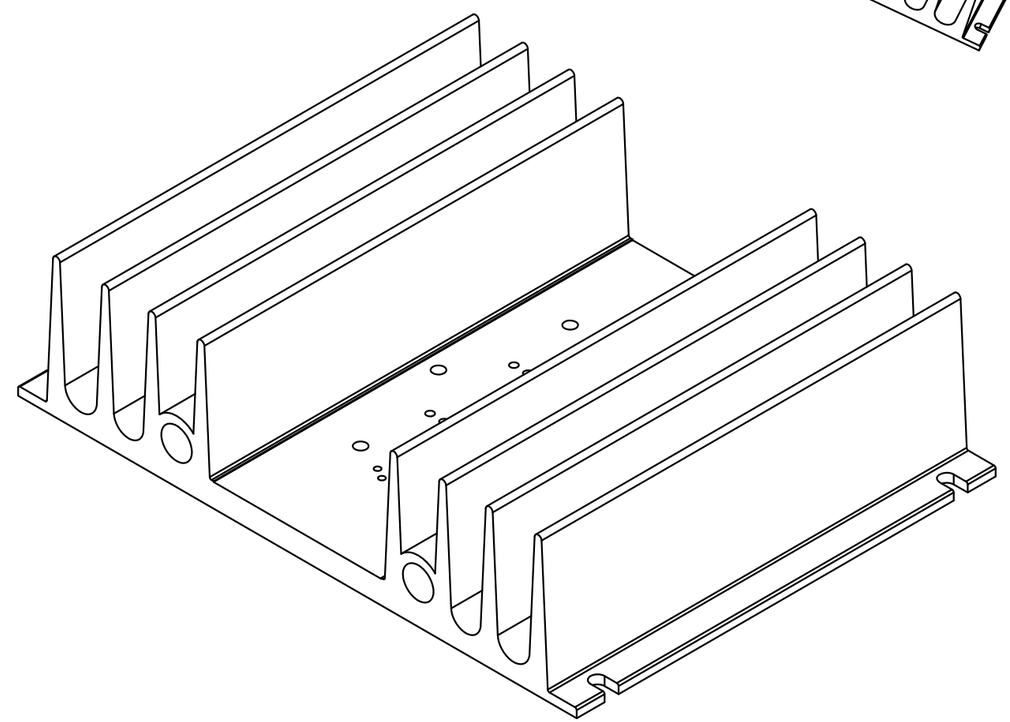

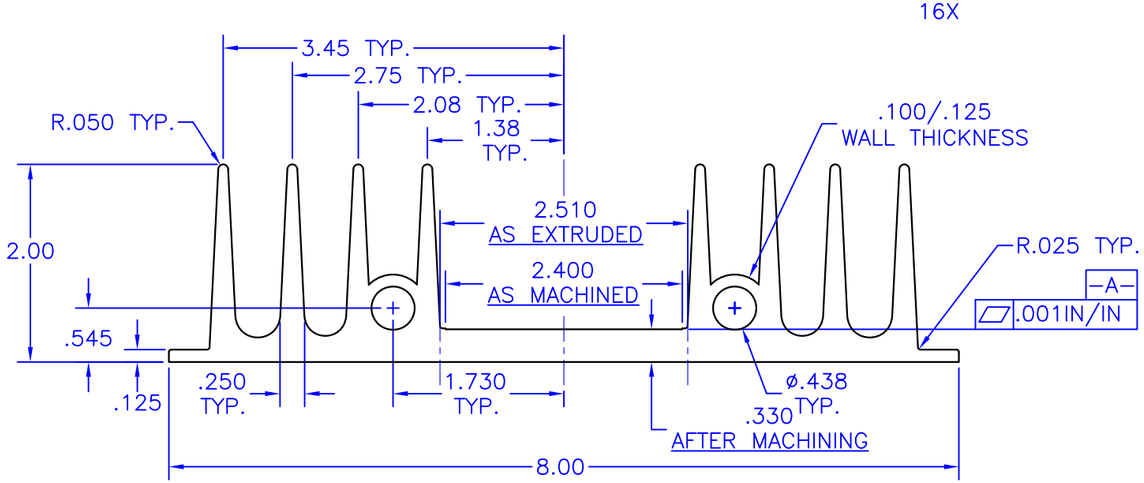

NOTES:

1. Unless otherwise noted, all dimensions are in inches.
2. Break all sharp edges, de-burr & remove loose chips.
3. Material: 6063-T5 aluminum
4. Finish: Anodize per MIL-A-8625F, Type III, Class 2, Black
   Typical breakdown voltage > 300V
5. Mark with contrasting ink as shown, if specified by P.O.
6. Approximate Weight: 46.2 oz [1310g]

TOLERANCES - UNLESS OTHERWISE SPECIFIED .XX = ±.05 [.002] .XXX = ±.005 [.0002] ANG. = ±2°	APEX MICROTECHNOLOGY	TITLE: TO-3 & P-DIP HEATSINK				MODEL: HS11	
		SUBJECT: MECHANICAL DRAWING					
		ENGINEER: D-M	DRAWN BY: P.ECK	DCA: 50428	SH 1 OF 1	FILENAME: HS11	REV: E / DATE: 16OCT12