DWG. NO.
JBXEA0G05FPSDSC

THIS DRAWING IS A CONTROLLED DOCUMENT FOR SOURIAU USA, INC.
IT IS SUBJECT TO CHANGE WITHOUT NOTIFICATION.
CONTACT THE ENGINEERING DEPARTMENT FOR THE LATEST REVISION.

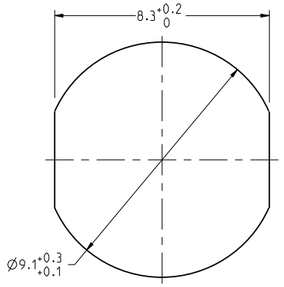

RECOMMENDED
PANEL CUTOUT

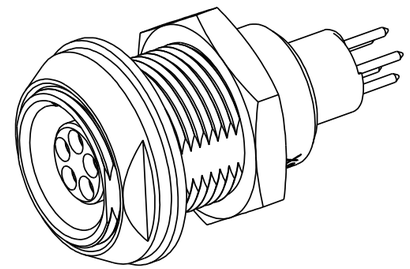

SCALE 5:1

NOTES:

MATERIAL:

OUTER SHELL & PANEL NUT : SHIELDING RING : NUT :	BRASS CuZn40Pb3 (C38500/C36000)
SOCKET CONTACT (PCB) :	CUPRO-NICKEL CuNi1Pb1P (CDAC 19150)
INSULATOR :	PEEK WITH 15% GLASS FILLED, COLOR BROWN

FINISH:

OUTER SHELL :	CHROME OVER NICKEL UNDERCOAT
OTHER BRASS PARTS EXCEPT SOCKET CONTACTS :	NICKEL
SOCKET CONTACTS :	GOLD AS PER MIL-G-45204C TYPE 1,CLASS 00.

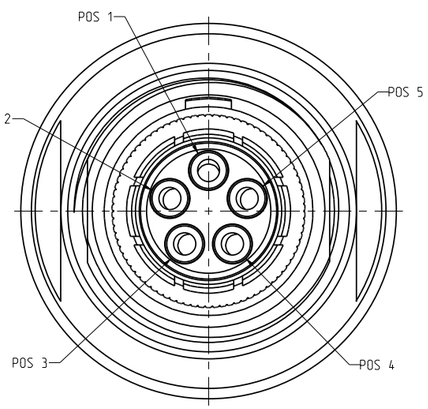

MATING SIDE VIEW

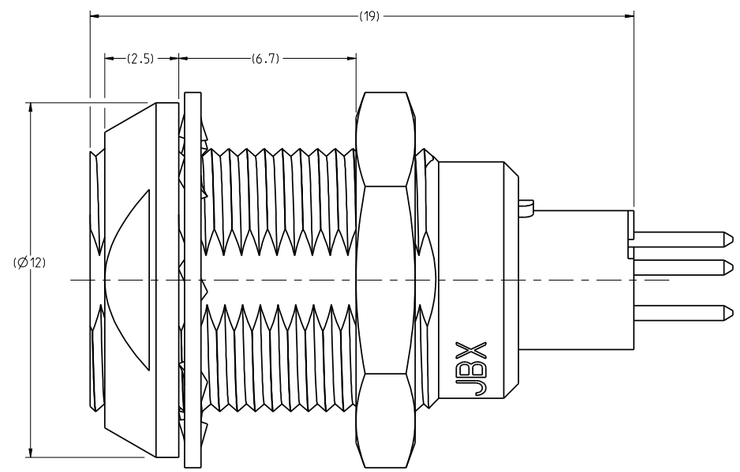

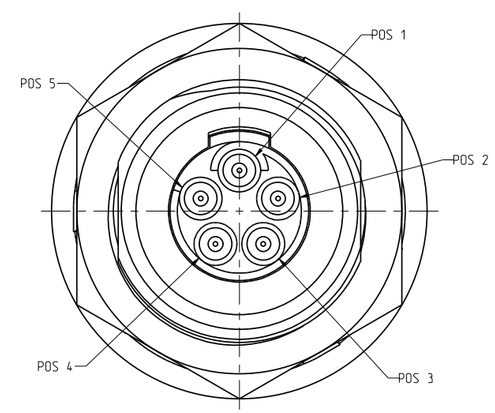

WIRE SIDE VIEW

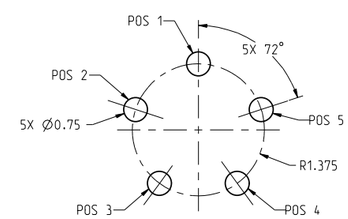

PCB CUTOUT

REV	DESCRIPTION	BY DATE	CHKD DATE
A	RELEASED PER ECN 11353	SSF 01-26-11	SDH 01-26-11

DRAWING TITLE
JBX, SIZE 0, 5 POSITION EA RECEPTACLE

CAT NO.
JBXEA0G05FPSDS

CAGE NO: 09922 | SIZE: C

APPROVAL		
DRAWN:	SNL	12-23-10
CHKD :	TW	12-23-10
DSGN :	XXX	mm-dd-yy
MFG :	DH	12-23-10
QC :	DK	12-23-10

DRAWING SCALE: 8:1

DRAWING NO.	REV
JBXEA0G05FPSDSC	A

1 OF 2

LINEAR MEASURE: (INCH) mm (INCH)
THIRD ANGLE PROJECTION

TOLERANCES UNLESS OTHERWISE SPECIFIED

No. OF PLACES	mm (INCH)
WHOLE No.	±0.5 (±.02)
ONE PLACE	±0.2 (±.008)
TWO PLACES	±0.1 (±.004)
ANGLES	±1°

CUSTOMER

INTERPRET THIS DRAWING IN ACCORDANCE WITH ASME Y14.5M - 1994.

SOURIAU Connection Technology
www.souriau.com

THE INFORMATION CONTAINED IN THIS DRAWING IS CONFIDENTIAL AND MAY NOT BE DISCLOSED WITHOUT WRITTEN CONSENT FROM SOURIAU USA, INC.

PRO-E

THIS DRAWING IS A CONTROLLED DOCUMENT FOR SOURIAU USA, INC.
IT IS SUBJECT TO CHANGE WITHOUT NOTIFICATION.
CONTACT THE DESIGNER CONTROL CENTER FOR THE LATEST REVISION.

DWG. NO.
JBXEA0G05FPSDSC

ELECTRICAL:

EMI SHIELDING :	SHIELDED FOR THE RANGE 55dB UP TO 100MHz
INSULATION RESISTANCE :	>500MΩ PER ANSI-EIA-364-D METHOD 21
MAX. CURRENT RATING :	(SEE TABLE 1) MAXIMUM CURRENT THAT CAN BE APPLIED SIMULTANEOUSLY ON EACH LINE OF THE CONNECTOR MATED PAIR, CONTINUOUSLY DURING ITS LIFE TIME IN NORMAL CLIMATIC CONDITIONS.
CONNECTOR TESTING : VOLTAGE	800Vrms TEST VOLTAGE IS APPROXIMATELY 75% OF THE DWV VOLTAGE AT NORMAL CLIMATIC CONDITIONS. THIS VOLTAGE CAN BE ACHIEVED SEVERAL TIMES, BUT NOT APPLIED CONTINUOUSLY.
CONNECTOR WORKING : VOLTAGE	400/260 (Vdc/ Vrms) WORKING VOLTAGE IS APPROXIMATELY 1/3 OF THE TEST VOLTAGE. THIS VOLTAGE IS SUSTAINABLE FOR THE LIFE OF THE CONNECTOR IN ITS WORKING ENVIRONMENT.

ENVIRONMENTAL:

ENDURANCE:	1000 CYCLES AS PER MIL-STD 1344A. METHOD 2016.1
SHOCK:	50 g , DURATION 6 ms; AS PER MIL-STD 1344A, METHOD 2004.1
VIBRATIONS:	10 TO 2000Hz γ = 15g, AS PER MIL-STD 1344A, METHOD 2005.1
PROTECTION INDEX:	IP 40 AS PER CEI 529
OPERATING TEMPERATURE:	-55°C TO +200°C (-67°F TO +392°F)

SOCKET CONTACT

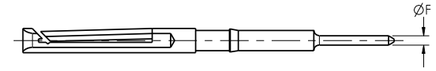

TABLE 1

CONTACT ØC	CONTACT ØF	MAX. CURRENT RATING (A)	CONTACT RESISTANCE (mΩ)
-	0.5	7	5

THE INFORMATION CONTAINED IN THIS DRAWING IS CONFIDENTIAL AND MAY NOT BE DISCLOSED WITHOUT WRITTEN CONSENT FROM SOURIAU USA, INC.

LINEAR MEASURE:	mm (INCH)
THIRD ANGLE PROJECTION	
TOLERANCES UNLESS OTHERWISE SPECIFIED	
No. OF PLACES	mm [INCH]
WHOLE No.	±0.5 [±.02]
ONE PLACE	±0.2 [±.008]
TWO PLACES	±0.1 [±.004]
ANGLES	±1°

DRAWING TITLE
JBX, SIZE 0, 5 POSITION EA RECEPTACLE

CAT NO. **JBXEA0G05FPSDS**

CAGE NO: 09922 | SIZE: C

CUSTOMER

INTERPRET THIS DRAWING IN ACCORDANCE WITH ASME Y14.5M - 1994.

SOURIAU Connection Technology
www.souriau.com

APPROVAL		
DRAWN:	SNL	12-23-10
CHKD :	TW	12-23-10
DSGN :	XXX	mm-dd-yy
MFG :	DH	12-23-10
QC :	DK	12-23-10

DRAWING SCALE: 8:1

DRAWING NO.	REV
JBXEA0G05FPSDSC	A

2 OF 2

PRO-E