DWG. NO.
JBXEA2G05FCSDSC

THIS DRAWING IS A CONTROLLED DOCUMENT FOR SOURIAU USA, INC. IT IS SUBJECT TO CHANGE WITHOUT NOTIFICATION. CONTACT THE RECEIVING CONTROL CENTER FOR THE LATEST REVISION.

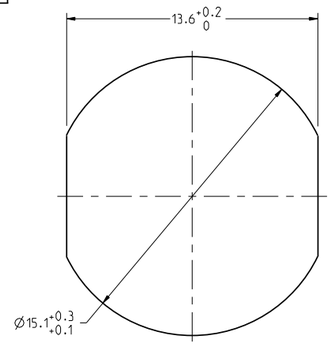

RECOMMENDED
PANEL CUTOUT

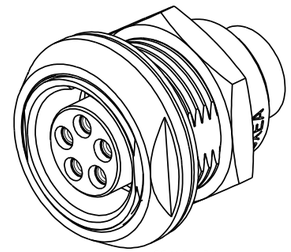

SCALE 3:1

NOTES:

MATERIAL:

OUTER SHELL & PANEL NUT :
SHIELDING RING :
NUT : } BRASS CuZn40Pb3 (C38500/C36000)

SOCKET CONTACT (CRIMP) : CUPRO-NICKEL CuNi1Pb1P (CDAC 19150)

CLIP : BERYLLIUM COPPER CuBe1.9 (C17200/C36000)

INSULATOR : PEEK WITH 15% GLASS FILLED, COLOR BROWN

FINISH:

OUTER SHELL : CHROME OVER NICKEL UNDERCOAT

OTHER BRASS PARTS
EXCEPT SOCKET CONTACTS : NICKEL

SOCKET CONTACTS : GOLD AS PER MIL-G-45204C TYPE 1.CLASS 00.

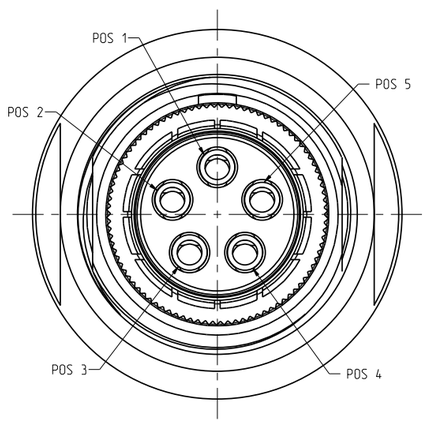

MATING SIDE VIEW

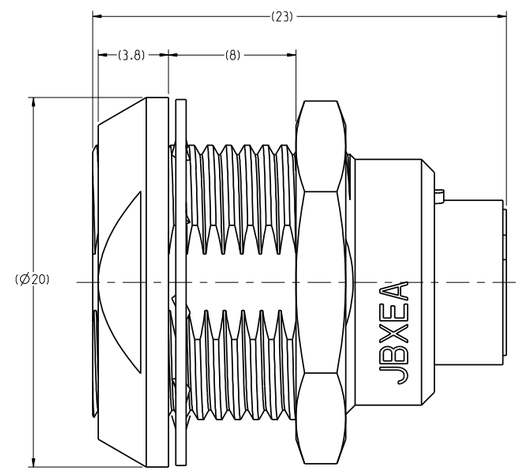

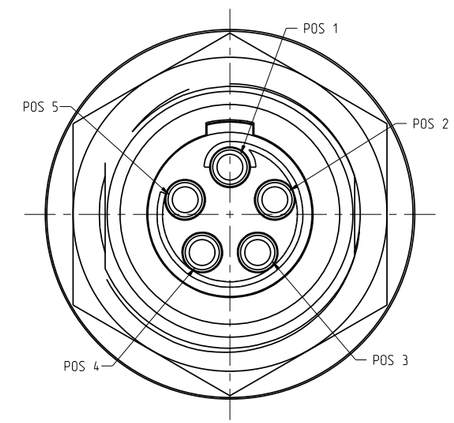

WIRE SIDE VIEW

THE INFORMATION CONTAINED IN THIS DRAWING IS CONFIDENTIAL AND MAY NOT BE DISCLOSED WITHOUT WRITTEN CONSENT FROM SOURIAU USA, INC.

REV	DESCRIPTION	BY DATE	CHKD DATE
A	RELEASED PER ECN 11353	SSF 01-26-11	SDH 01-26-11

DRAWING TITLE
JBX, SIZE 2, 5 POSITION, EA RECEPTACLE

CAT NO.
JBXEA2G05FCSDS

CAGE NO: 09922 | SIZE: C

LINEAR MEASURE: mm (INCH) mm (INCH)
THIRD ANGLE PROJECTION

TOLERANCES UNLESS OTHERWISE SPECIFIED

No. OF PLACES	mm [INCH]
WHOLE No.	±0.5 [±.02]
ONE PLACE	±0.2 [±.008]
TWO PLACES	±0.1 [±.004]
ANGLES	±1°

CUSTOMER

INTERPRET THIS DRAWING IN ACCORDANCE WITH ASME Y14.5M - 1994.

SOURIAU Connection Technology
www.souriau.com

APPROVAL		
DRAWN:	RKO	12-30-10
CHKD :	TW	12-30-10
DSGN :	XXX	mm-dd-yy
MFG :	DH	12-30-10
QC :	DK	12-30-10

DRAWING SCALE: 5:1

DRAWING NO.	REV
JBXEA2G05FCSDSC	A

1 OF 2

PRO-E

THIS DRAWING IS A CONTROLLED DOCUMENT FOR SOURIAU USA, INC.
IT IS SUBJECT TO CHANGE WITHOUT NOTIFICATION.
CONTACT THE DESIGNER CONTROL CENTER FOR THE LATEST REVISION.

DWG. NO.
JBXEA2G05FCSDSC

ELECTRICAL:

EMI SHIELDING : SHIELDED FOR THE RANGE 55dB UP TO 100MHz

INSULATION RESISTANCE : >500MΩ PER ANSI-EIA-364-D METHOD 21

MAX. CURRENT RATING : (SEE TABLE 1) MAXIMUM CURRENT THAT CAN BE APPLIED SIMULTANEOUSLY ON EACH LINE OF THE CONNECTOR MATED PAIR, CONTINUOUSLY DURING ITS LIFE TIME IN NORMAL CLIMATIC CONDITIONS.

CONNECTOR TESTING : VOLTAGE — 1900 Vrms TEST VOLTAGE IS APPROXIMATELY 75% OF THE DWV VOLTAGE AT NORMAL CLIMATIC CONDITIONS. THIS VOLTAGE CAN BE ACHIEVED SEVERAL TIMES, BUT NOT APPLIED CONTINUOUSLY.

CONNECTOR WORKING : VOLTAGE — 900/630 (Vdc/ Vrms) WORKING VOLTAGE IS APPROXIMATELY 1/3 OF THE TEST VOLTAGE. THIS VOLTAGE IS SUSTAINABLE FOR THE LIFE OF THE CONNECTOR IN ITS WORKING ENVIRONMENT.

PHYSICAL:

MAXIMUM WIRE SIZE USED FOR CRIMPING : 18 AWG

ENVIRONMENTAL:

ENDURANCE: 1000 CYCLES AS PER MIL-STD 1344A, METHOD 2016.1

SHOCK: 100 g , DURATION 6 ms; AS PER MIL-STD 1344A, METHOD 2004.1

VIBRATIONS: 10 TO 2000Hz γ = 20 g, AS PER MIL-STD 1344A, METHOD 2005.1

PROTECTION INDEX: IP 40 AS PER CEI 529

OPERATING TEMPERATURE: -55°C TO +200°C (-67°F TO +392°F)

SOCKET CONTACT

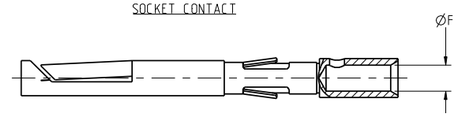

TABLE 1

CONTACT		USABLE CABLES			MAX. CURRENT RATING (A)	CONTACT RESISTANCE (mΩ)
ØC	ØF	CORE SECTION (mm^2) MIN.	CORE SECTION (mm^2) MAX.	AWG		
-	1.4	0.326	0.823	18-20-22	15	3

THE INFORMATION CONTAINED IN THIS DRAWING IS CONFIDENTIAL AND MAY NOT BE DISCLOSED WITHOUT WRITTEN CONSENT FROM SOURIAU USA, INC.

LINEAR MEASURE: (INCH) mm (INCH)
THIRD ANGLE PROJECTION

TOLERANCES UNLESS OTHERWISE SPECIFIED

No. OF PLACES	mm [INCH]
WHOLE No.	±0.5 [±.02]
ONE PLACE	±0.2 [±.008]
TWO PLACES	±0.1 [±.004]
ANGLES	±1°

DRAWING TITLE
JBX, SIZE 2, 5 POSITION, EA RECEPTACLE

CAT NO. **JBXEA2G05FCSDS**

CAGE NO: 09922 SIZE: C

CUSTOMER

INTERPRET THIS DRAWING IN ACCORDANCE WITH ASME Y14.5M - 1994.

SOURIAU Connection Technology
www.souriau.com

APPROVAL		
DRAWN:	RKO	12-30-10
CHKD :	TW	12-30-10
DSGN :	XXX	mm-dd-yy
MFG :	DH	12-30-10
QC :	DK	12-30-10

DRAWING SCALE: 5:1

DRAWING NO.	REV
JBXEA2G05FCSDSC	A

2 OF 2

PRO-E