DWG. NO.
JBXFD0G02MSSDSMRC

THIS DRAWING IS A CONTROLLED DOCUMENT FOR SOURIAU USA, INC.
IT IS SUBJECT TO CHANGE WITHOUT NOTIFICATION.
CONTACT THE ENGINEERING DIVISION FOR THE LATEST REVISION.

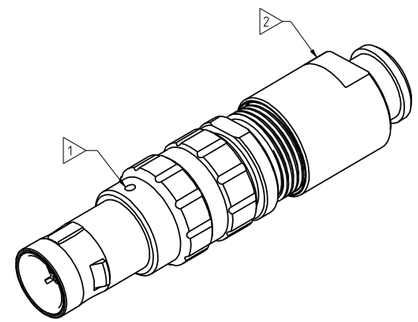

SCALE 3:1

NOTES:

1. RED DOT.

MATERIAL:

OUTER SHELL & COLLET NUT : LATCHING SLEEVE : HALF BUSHES :	BRASS CuZn40Pb3 (C38500/C36000)
PIN CONTACT (SOLDER) :	BRASS CuZn35Pb2 (C35300/C36000)
CLIP :	BERYLLIUM COPPER CuBe1,9 (C17200/C36000)
INSULATOR :	PEEK WITH 15% GLASS FILLED, COLOR BROWN
COLLET :	PA6/6 WITH MoS2, COLOR BLACK

FINISH:

OUTER SHELL & : COLLET NUT	CHROME OVER NICKEL UNDERCOAT
OTHER BRASS PARTS EXCEPT PIN CONTACTS :	NICKEL
PIN CONTACTS :	GOLD AS PER MIL-G-45204C TYPE 1,CLASS 00.

2. CONNECTOR WITH BACKNUT FOR PROTECTIVE BOOT - PROTECTIVE BOOT TO ORDER SEPARATELY.

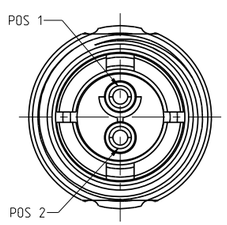

WIRE SIDE VIEW
('COLLET SET' NOT SHOWN)

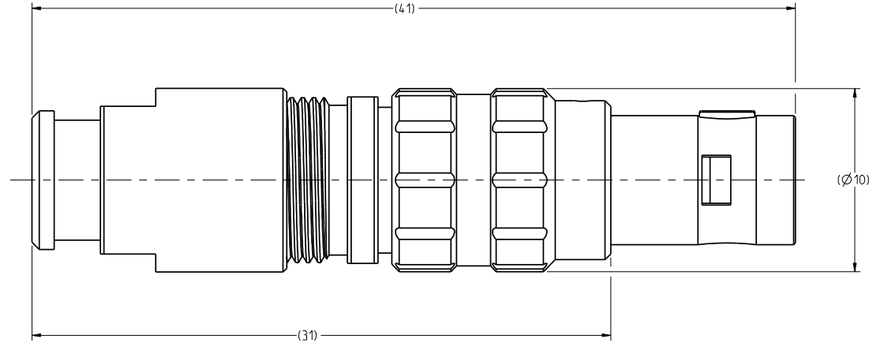

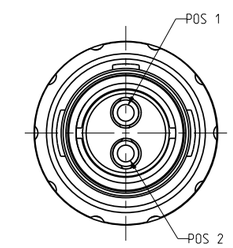

MATING SIDE VIEW

THE INFORMATION CONTAINED IN THIS DRAWING IS CONFIDENTIAL AND MAY NOT BE
DISCLOSED WITHOUT WRITTEN CONSENT FROM SOURIAU USA, INC.

REV	DESCRIPTION	BY DATE	CHKD DATE
A	RELEASED PER ECN 11334	SSF 01-18-11	SDH 01-18-11

DRAWING TITLE
JBX, SIZE 0, 02 POSITION, MALE STRAIGHT PLUG

CAT NO.
JBXFD0G02MSSDSMR

CAGE NO: 09922 | SIZE: C

APPROVAL		
DRAWN:	TJS	12-18-10
CHKD :	TW	12-18-10
DSGN :	XXX	mm-dd-yy
MFG :	DH	12-18-10
QC :	DK	12-18-10

DRAWING SCALE: 5:1

DRAWING NO.	REV
JBXFD0G02MSSDSMRC	A

1 OF 2

LINEAR MEASURE: mm (INCH) mm (INCH)
THIRD ANGLE PROJECTION

TOLERANCES UNLESS OTHERWISE SPECIFIED

No. OF PLACES	mm [INCH]
WHOLE No.	±0.5 [±.02]
ONE PLACE	±0.2 [±.008]
TWO PLACES	±0.1 [±.004]
ANGLES	±1°

CUSTOMER

INTERPRET THIS DRAWING IN ACCORDANCE WITH ASME Y14.5M - 1994.

SOURIAU Connection Technology
www.souriau.com

PRO-E

THIS DRAWING IS A CONTROLLED DOCUMENT FOR SOURIAU USA, INC.
IT IS SUBJECT TO CHANGE WITHOUT NOTIFICATION
CONTACT THE DESIGNER FOR FURTHER INFORMATION OR THE LATEST REVISION.

DWG. NO.
JBXFD0G02MSSDSMRC

ELECTRICAL:

EMI SHIELDING :	SHIELDED FOR THE RANGE 55dB UP TO 100MHz
INSULATION RESISTANCE :	>500MΩ PER ANSI-EIA-364-D METHOD 21
MAX. CURRENT RATING :	(SEE TABLE 1) MAXIMUM CURRENT THAT CAN BE APPLIED SIMULTANEOUSLY ON EACH LINE OF THE CONNECTOR MATED PAIR, CONTINUOUSLY DURING ITS LIFE TIME IN NORMAL CLIMATIC CONDITIONS.
CONNECTOR TESTING : VOLTAGE	1400Vrms TEST VOLTAGE IS APPROXIMATELY 75% OF THE DWV VOLTAGE AT NORMAL CLIMATIC CONDITIONS. THIS VOLTAGE CAN BE ACHIEVED SEVERAL TIMES, BUT NOT APPLIED CONTINUOUSLY.
CONNECTOR WORKING : VOLTAGE	660/460 (Vdc/ Vrms) WORKING VOLTAGE IS APPROXIMATELY 1/3 OF THE TEST VOLTAGE. THIS VOLTAGE IS SUSTAINABLE FOR THE LIFE OF THE CONNECTOR IN ITS WORKING ENVIRONMENT.

PHYSICAL:

MAXIMUM WIRE SIZE USED :	24 AWG
CABLE DIAMETER WITH PLASTIC : COLLET SET SUPPLIED	Ø1.5mm MIN. TO Ø5.5mm MAX.

ENVIRONMENTAL:

ENDURANCE:	1000 CYCLES AS PER MIL-STD 1344A. METHOD 2016.1
SHOCK:	50 g . DURATION 6 ms; AS PER MIL-STD 1344A. METHOD 2004.1
VIBRATIONS:	10 TO 2000Hz γ = 15g. AS PER MIL-STD 1344A. METHOD 2005.1
PROTECTION INDEX:	IP 40 AS PER CEI 529
OPERATING TEMPERATURE: WITH PLASTIC COLLETS:	-55°C TO +125°C (-67°F TO +257°F)
WITH OPTIONAL METALLIC COLLETS: (ONLY ON REQUEST)	-55°C TO +200°C (-67°F TO +392°F)

PIN CONTACT

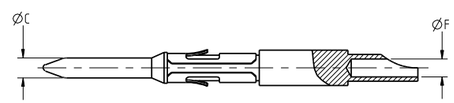

TABLE 1

CONTACT		USABLE CABLES			MAX. CURRENT RATING (A)	CONTACT RESISTANCE (mΩ)
ØC	ØF	CORE SECTION (mm^2) MIN.	CORE SECTION (mm^2) MAX.	AWG		
0.9	0.8	-	0.21	24	10	3.5

THE INFORMATION CONTAINED IN THIS DRAWING IS CONFIDENTIAL AND MAY NOT BE DISCLOSED WITHOUT WRITTEN CONSENT FROM SOURIAU USA, INC.

DRAWING TITLE
JBX, SIZE 0, 02 POSITION, MALE STRAIGHT PLUG

CAT NO. **JBXFD0G02MSSDSMR**

CAGE NO: 09922 | SIZE: C

LINEAR MEASURE: (mm) (INCH) mm (INCH)
THIRD ANGLE PROJECTION

TOLERANCES UNLESS OTHERWISE SPECIFIED

No. OF PLACES	mm (INCH)
WHOLE No.	±0.5 (±.02)
ONE PLACE	±0.2 (±.008)
TWO PLACES	±0.1 (±.004)
ANGLES	±1°

CUSTOMER

INTERPRET THIS DRAWING IN ACCORDANCE WITH ASME Y14.5M - 1994.

SOURIAU Connection Technology
www.souriau.com

APPROVAL		
DRAWN:	TJS	12-18-10
CHKD :	TW	12-18-10
DSGN :	XXX	mm-dd-yy
MFG :	DH	12-18-10
QC :	DK	12-18-10

DRAWING SCALE: 5:1

DRAWING NO.	REV
JBXFD0G02MSSDSMRC	A

2 OF 2

PRO-E