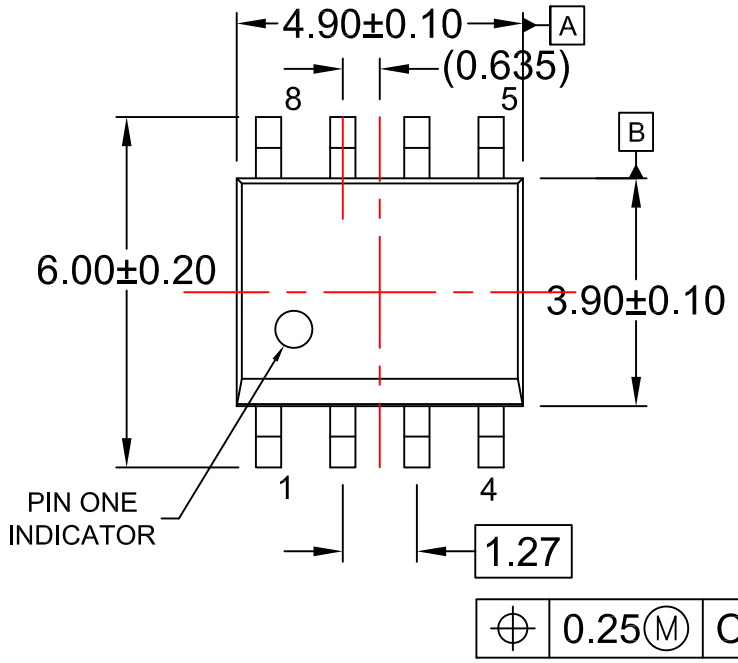

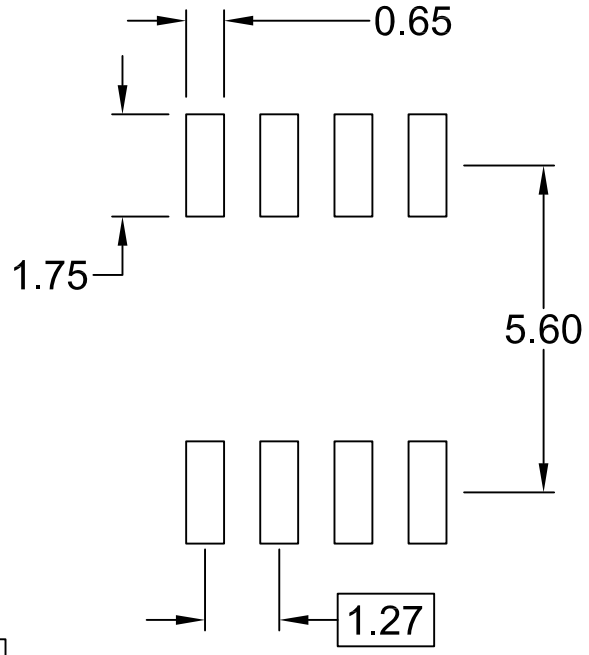

LAND PATTERN RECOMMENDATION

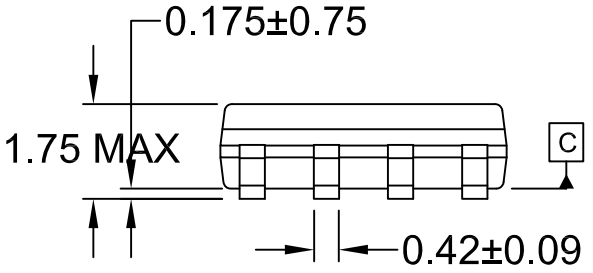

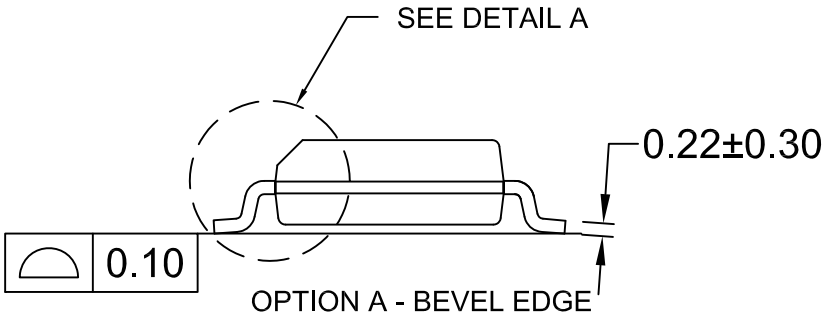

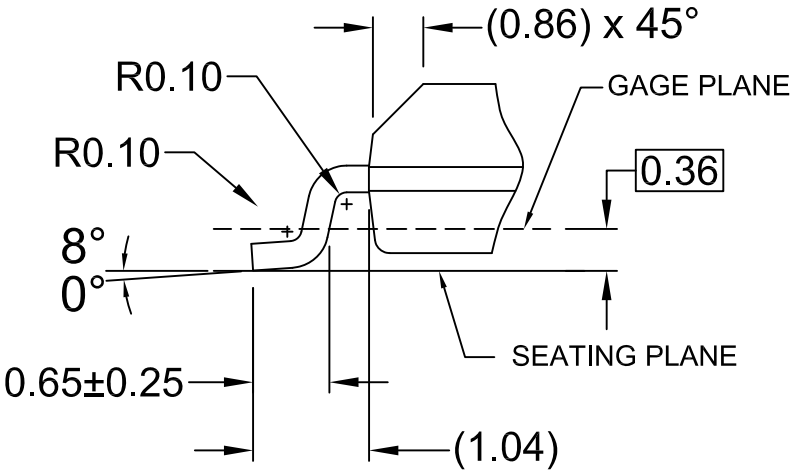

DETAIL A
SCALE: 2:1

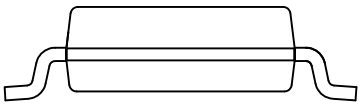

OPTION B - NO BEVEL EDGE

NOTES: UNLESS OTHERWISE SPECIFIED

A) THIS PACKAGE CONFORMS TO JEDEC MS-012, VARIATION AA.
B) ALL DIMENSIONS ARE IN MILLIMETERS.
C) DIMENSIONS DO NOT INCLUDE MOLD FLASH OR BURRS.
D) LANDPATTERN STANDARD: SOIC127P600X175-8M.
E) DRAWING FILENAME: M08Arev15
F) FAIRCHILD SEMICONDUCTOR.