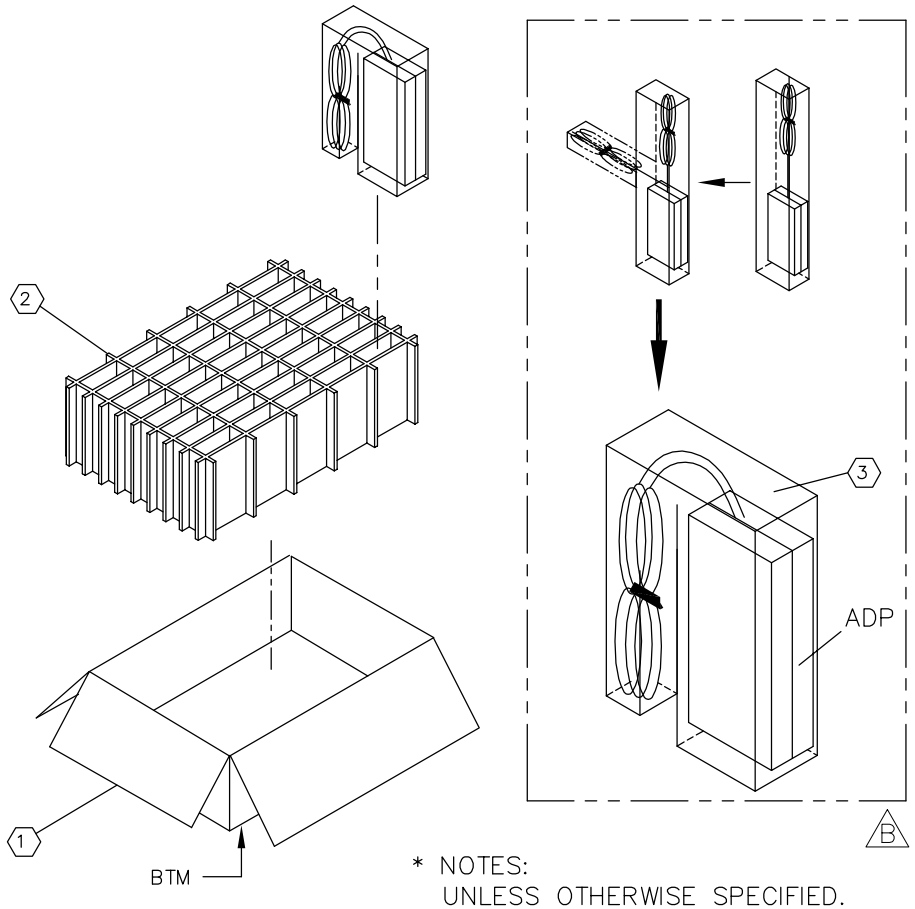

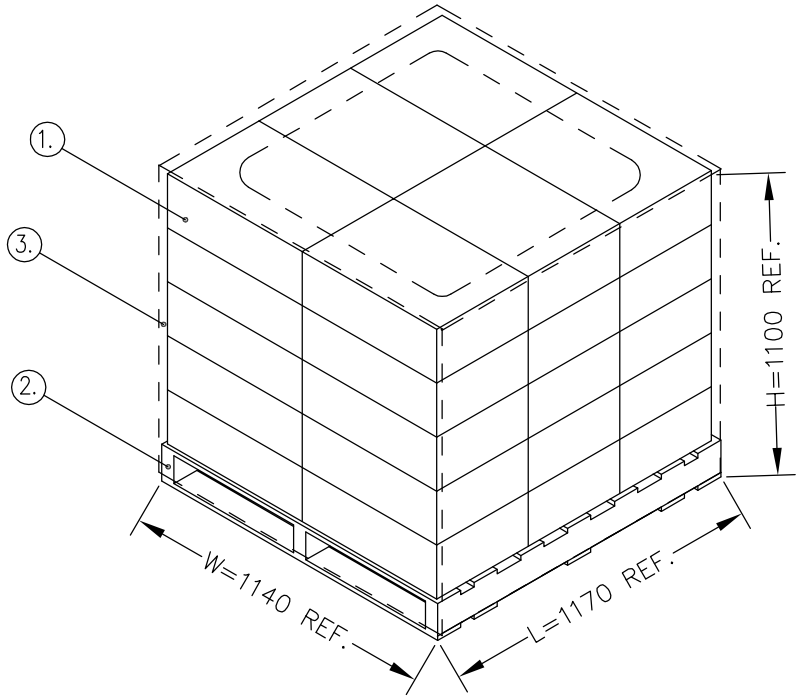

* NOTES:
UNLESS OTHERWISE SPECIFIED.
1. STAMP OR LABEL MODEL'S CONTENTS ON THE CARTON FOR EACH SHIPPING.
2. CARTON USES PACKING TAPE TO SEAL.

* PACKING ASS'Y DRAWING:
1. ALL DIMENSIONS ARE IN mm.
2. PARTS SPECIFIED AS FOLLOWS:

ITEM	PART NO.	DESCRIPTION	Q'TY
3	796136	PE BAG	1
2	732215	PARTITION	1/40
1	727728	OUT-CTN	1/40

* PALLET ASS'Y DRAWING:
1. ALL DIMENSIONS ARE IN mm.
2. PARTS SPECIFIED AS FOLLOWS:

ITEM	PART NAME	QUANTITY
1.	CARTON	1 CARTON=40 UNITS
2.	PALLET	1 PALLET=5 LAYERS =30 CARTONS =1200 UNITS
3.	POLYESTER FILM	2 LAYERS MIN. =1200 UNITS

TOLERANCES ±		
ANGULAR	LINEAR	
0.5°	0~6	0.10
	6~30	0.20
	30~80	0.25
	80~180	0.30
	180~315	0.50
	315~800	0.8

REVISION	DESCRIPTION	DATE	CHECKER
C	Change assembly process	2012/07/19	
A	Release	2012/06/22	

SHEET 1/1 | CODE | UNIT: mm | SCALE:

2D FILE PA-1051-91A1-LF_PML | 3D FILE

DESIGNER Felix | APPROVER Brian

LITEON | TITLE: PACKING ASS'Y | PROJECT: PA-1051-91A1-LF | PART NO.: | DRAWING NO.: PA-1051-91A1-LF_PML | REV.: B