DATE	SYM.	DESCRIPTION	DR	CK	REL

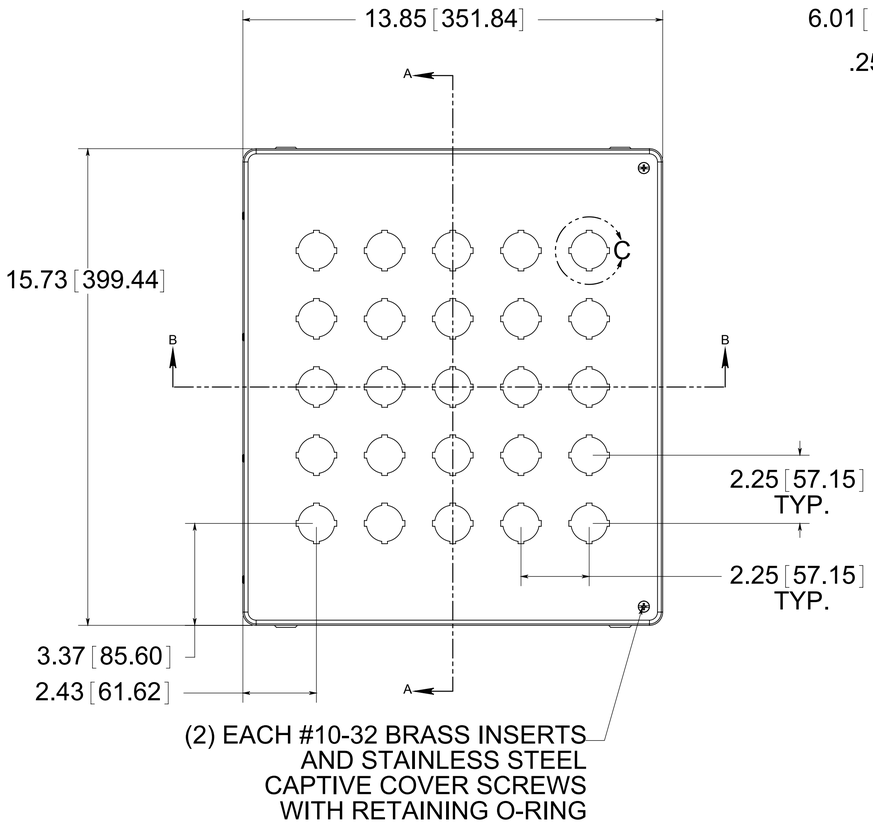

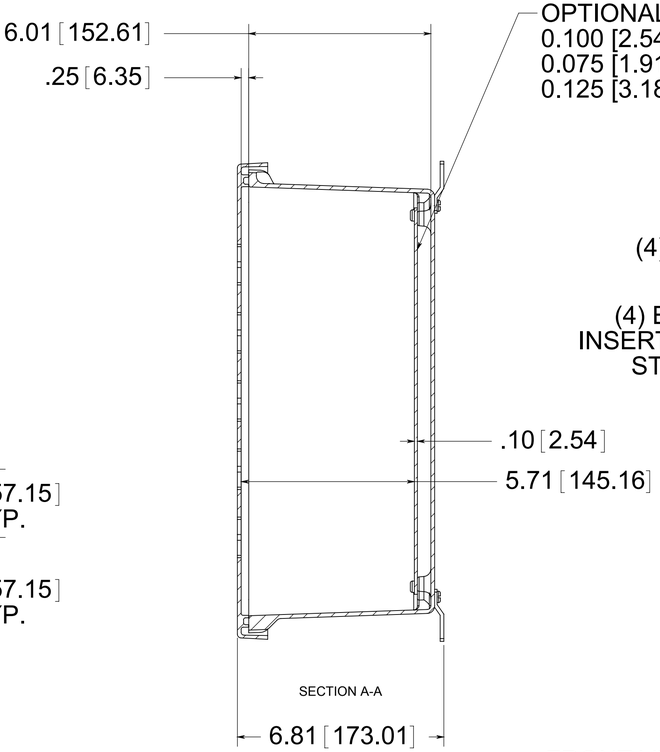

FRONT VIEW
WITH COVER REMOVED
AND BACK PANEL SHOWN

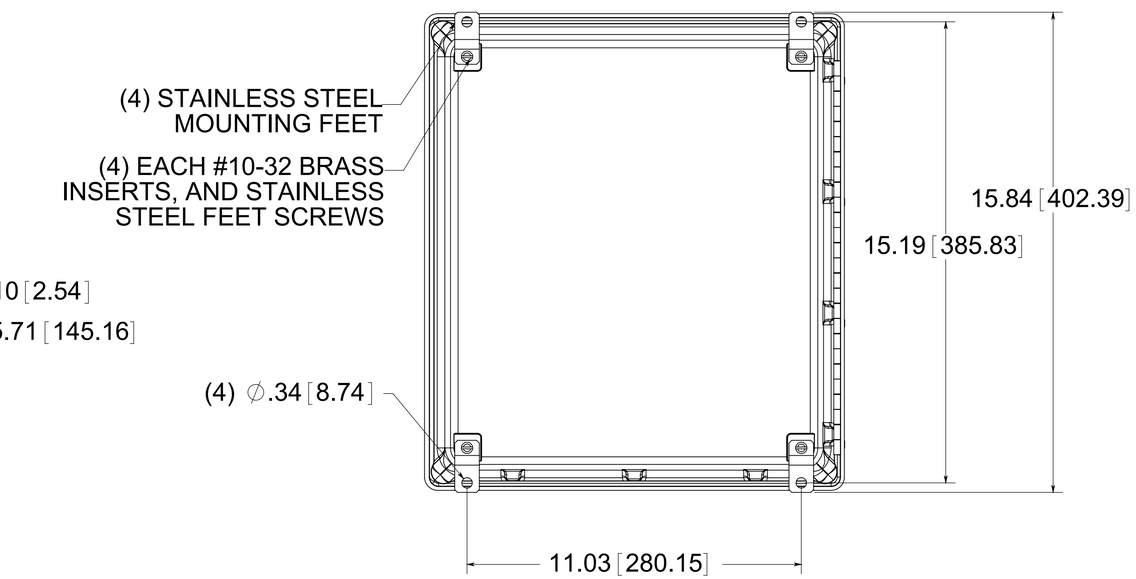

BACK VIEW

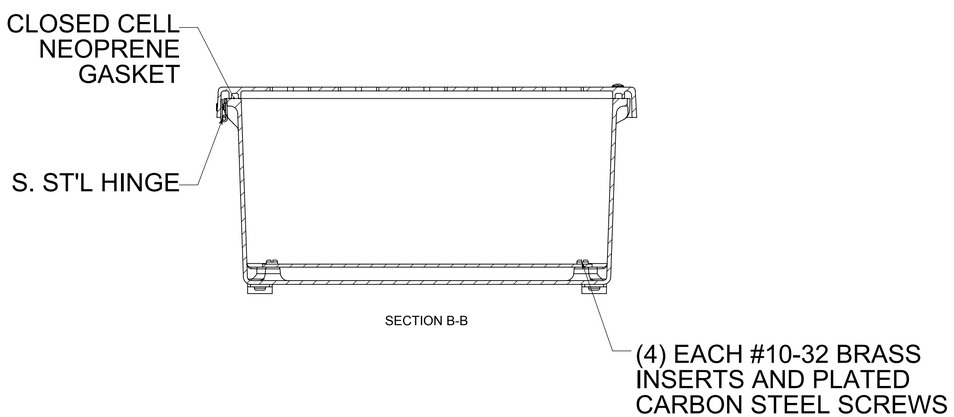

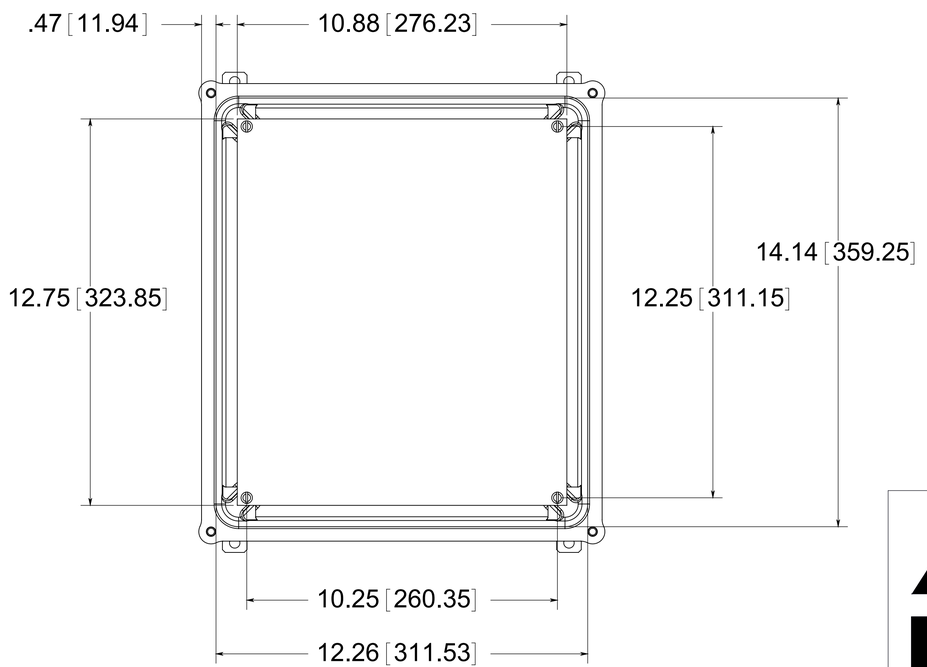

30.5mm HOLE DETAIL

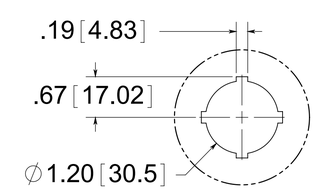

DETAIL C
SCALE 2 : 2.5

MATERIAL:
BOX- COMPRESSION MOLDED FIBERGLASS REINFORCED POLYESTER
COVER- COMPRESSION MOLDED FIBERGLASS REINFORCED POLYESTER
WINDOW- POLYCARBONATE

PART No. PJ1426HP25
for more information visit
www.hammfg.com
Data subject to change without notice
Drawing Not to Scale