DATE	SYM.	DESCRIPTION	DR	CK	REL

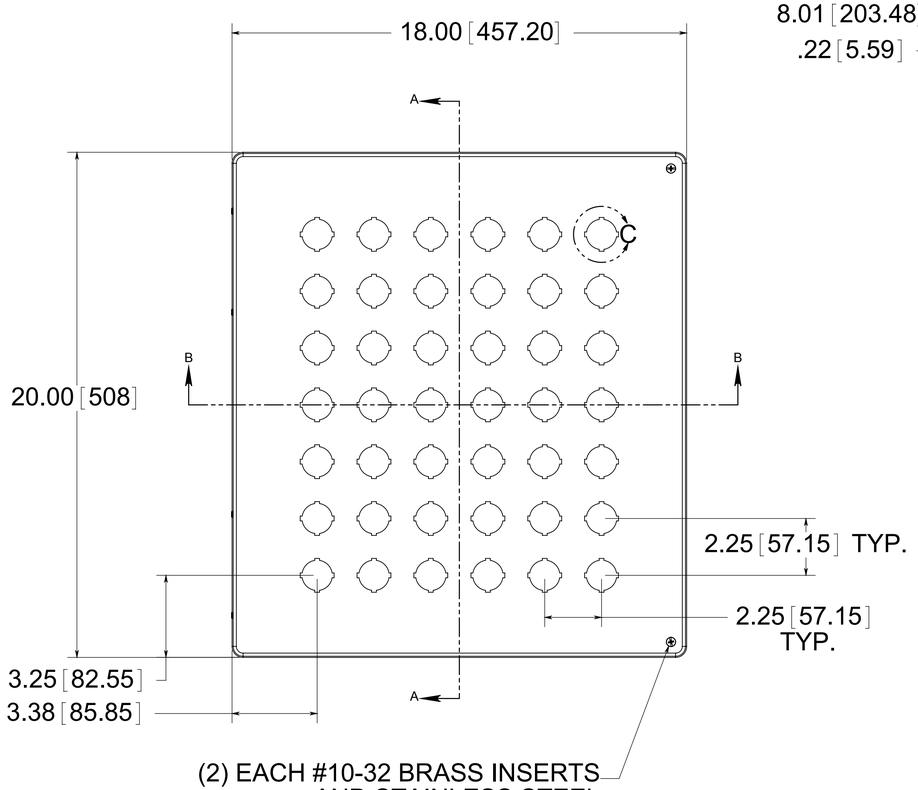

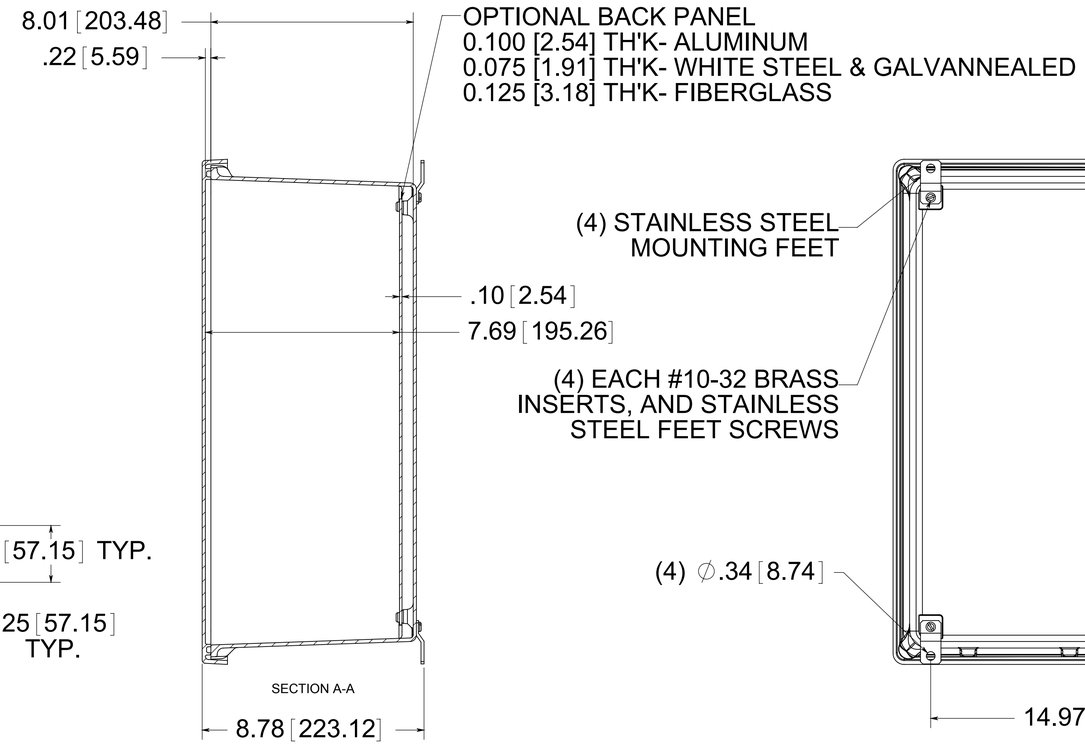

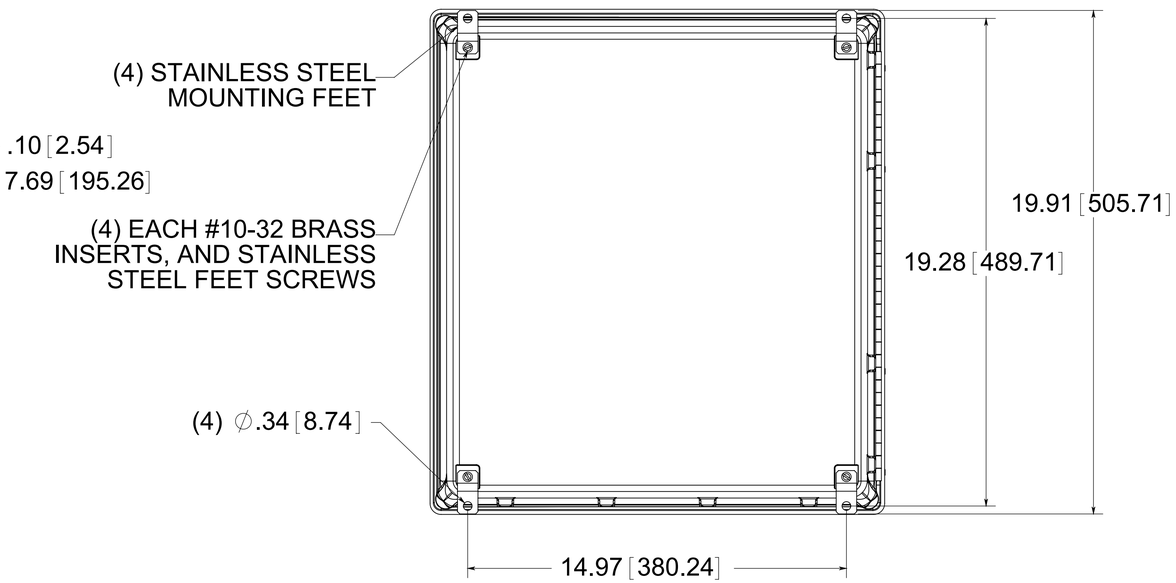

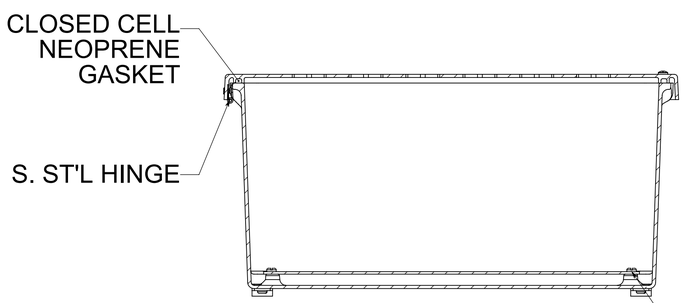

(4) EACH #10-32 BRASS INSERTS AND PLATED CARBON STEEL SCREWS

FRONT VIEW
WITH COVER REMOVED
AND BACK PANEL SHOWN

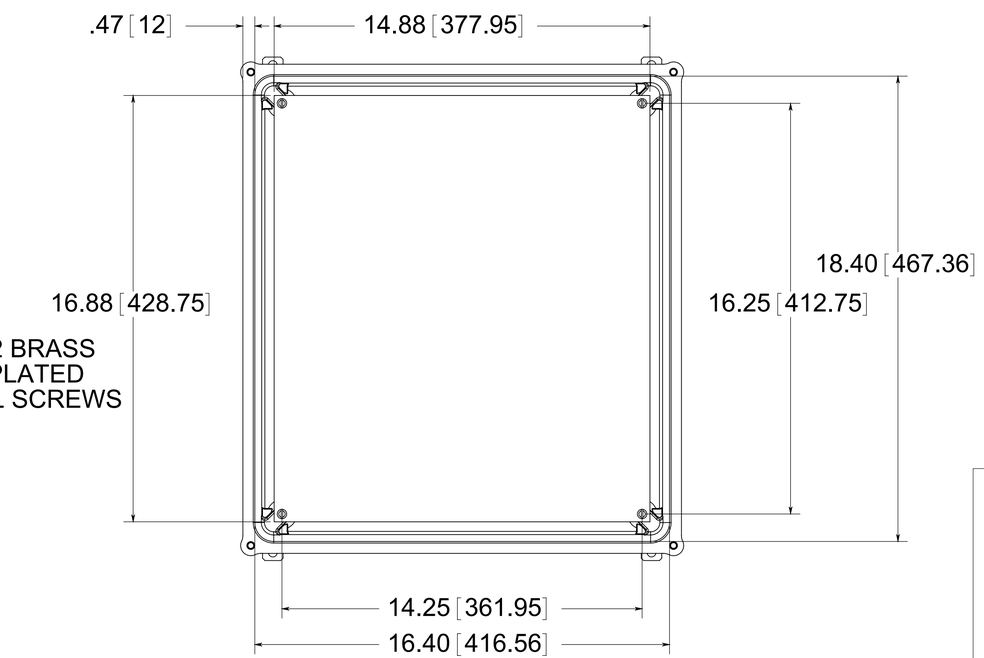

30.5 mm HOLE DETAIL

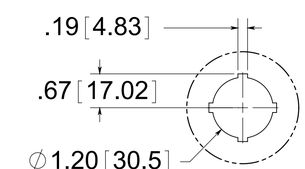

DETAIL C
SCALE 2 : 3

MATERIAL:
BOX- COMPRESSION MOLDED FIBERGLASS REINFORCED POLYESTER
COVER- COMPRESSION MOLDED FIBERGLASS REINFORCED POLYESTER
WINDOWS- POLYCARBONATE

PART No. PJ1868HP42
for more information visit
www.hammfg.com
Data subject to change without notice
Drawing Not to Scale