| DATE | REV. | DESCRIPTION | DR | CK | REL |
|---|---|---|---|---|---|
| | | | | | |
| | | | | | |

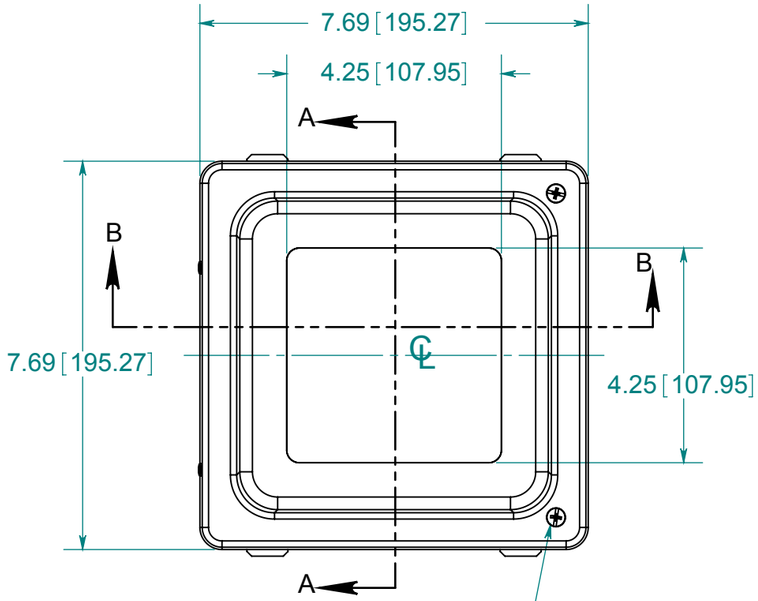


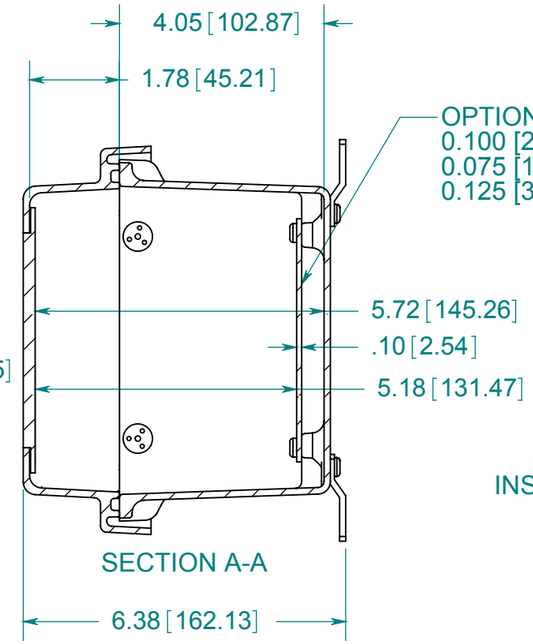


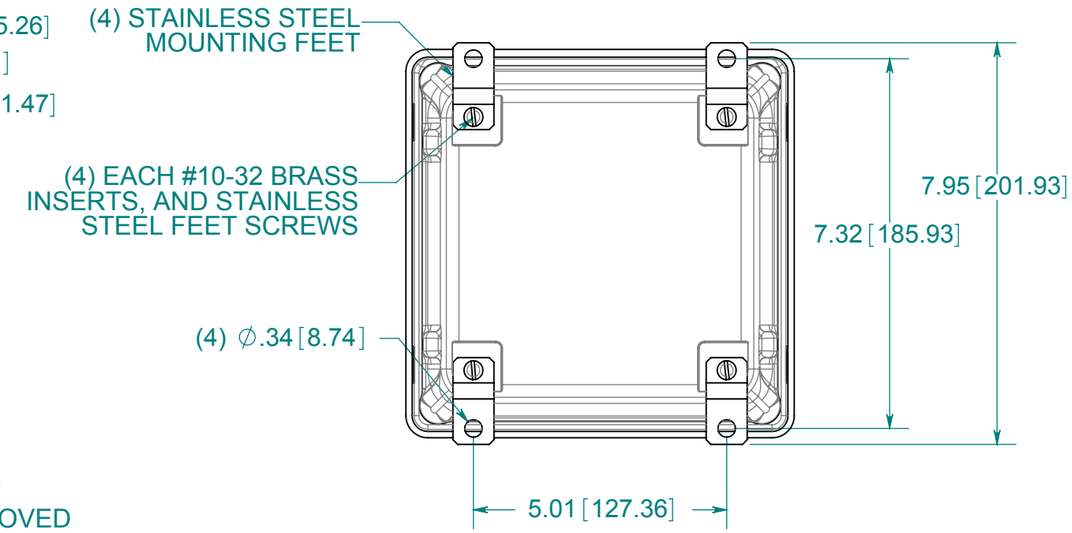


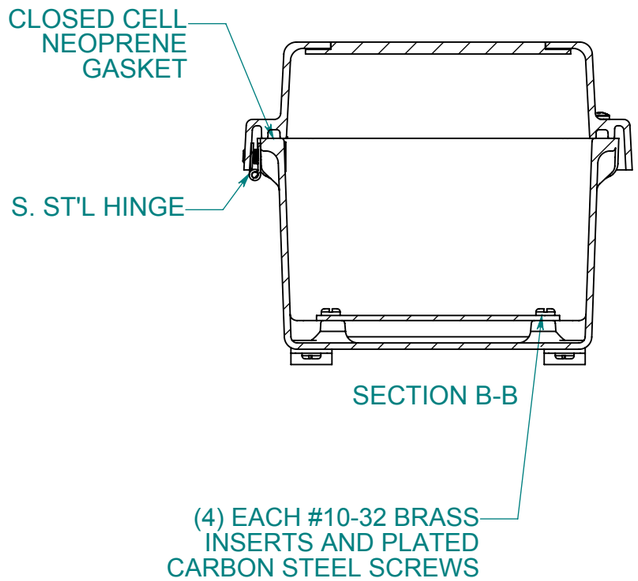


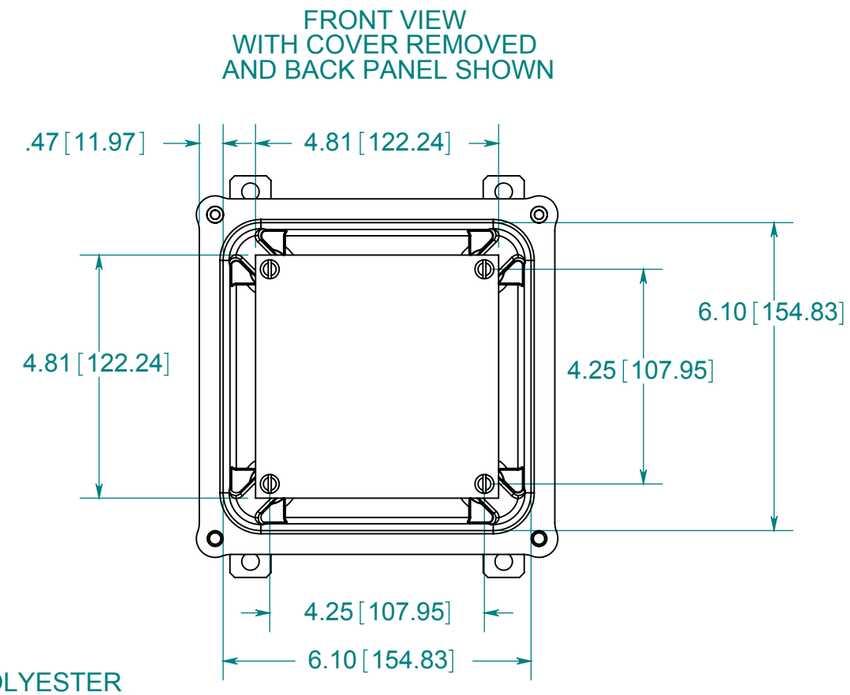


MATERIAL:
BOX- COMPRESSION MOLDED FIBERGLASS REINFORCED POLYESTER
COVER- COMPRESSION MOLDED FIBERGLASS REINFORCED POLYESTER
WINDOWS- POLYCARBONATE

PART No. PJ664HW
for more information visit
www.hammfg.com
Data subject to change without notice

Drawing Not to Scale