DATE	SYM.	DESCRIPTION	DR	CK	REL

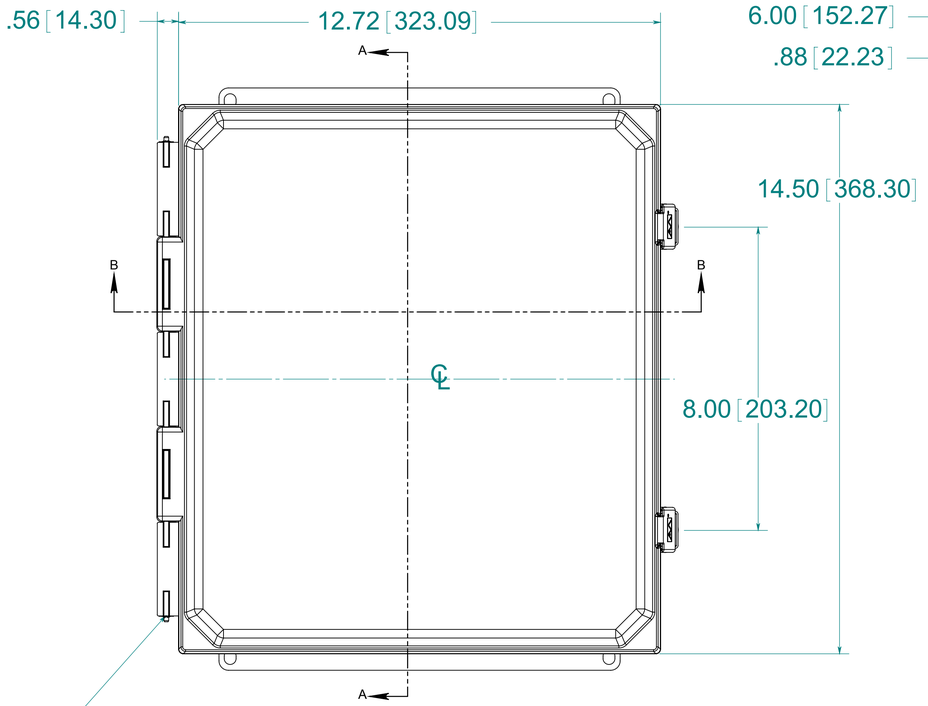

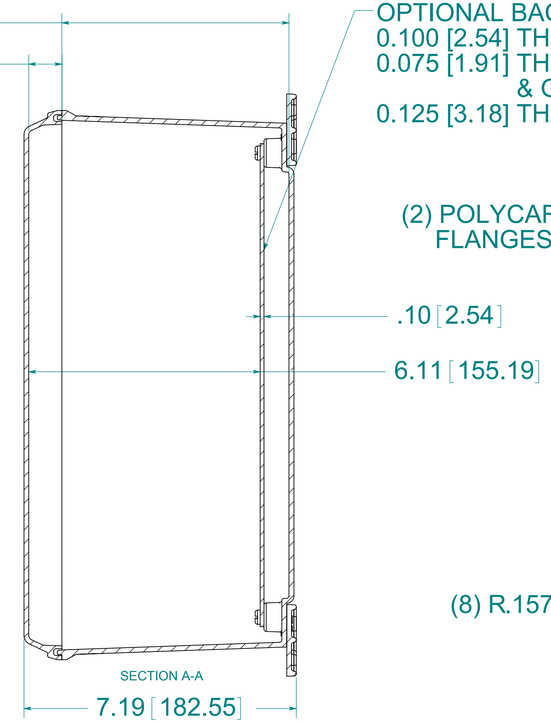

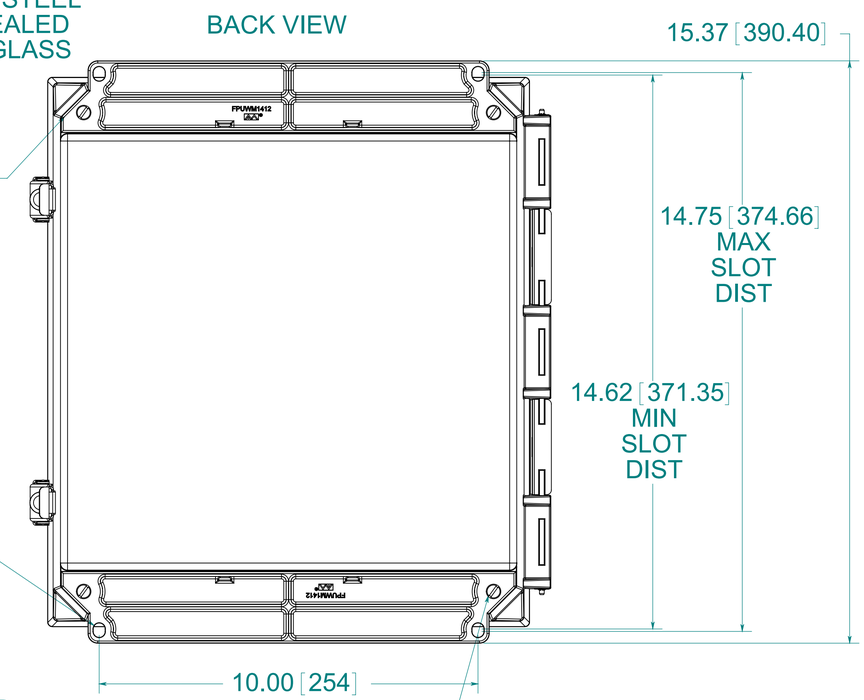

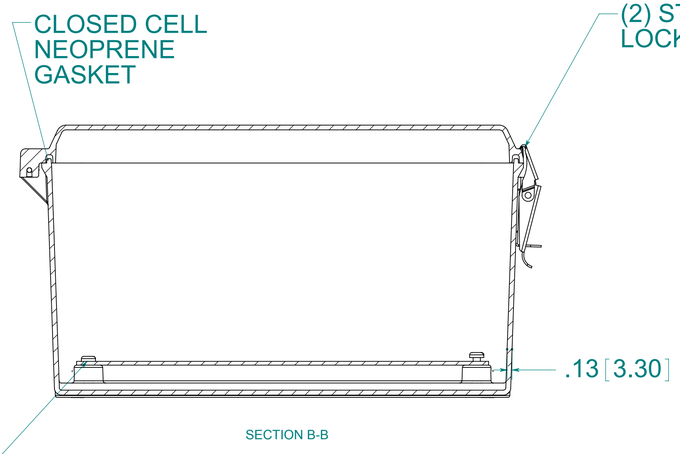

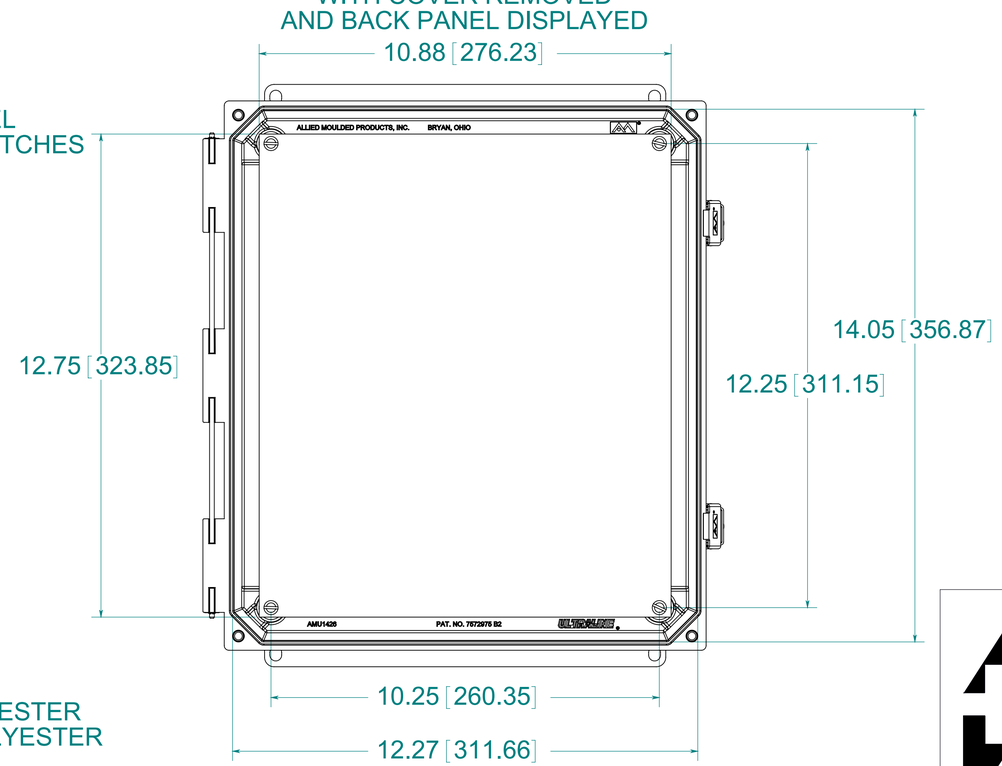

MATERIAL:
BOX-COMPRESSION MOLDED FIBERGLASS REINFORCED POLYESTER
COVER- COMPRESSION MOLDED FIBERGLASS REINFORCED POLYESTER
CLEAR COVER AND WINDOWS- POLYCARBONATE

PART No. PJU1426CCLF
for more information visit
www.hammfg.com
Data subject to change without notice

Drawing Not to Scale