DATE	SYM.	DESCRIPTION	DR	CK	REL

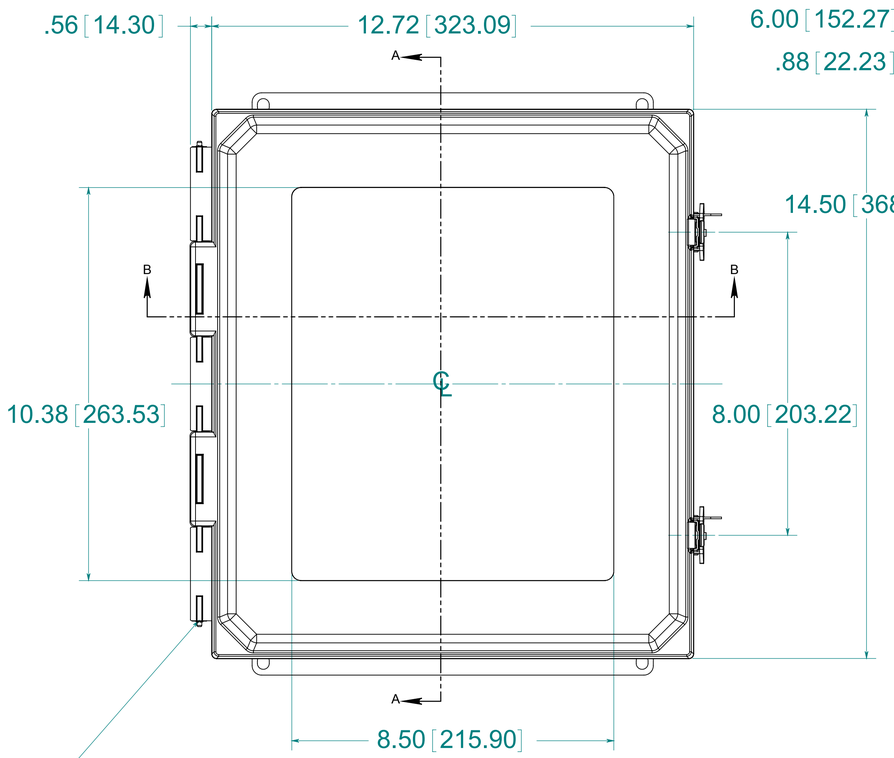

STAINLESS STEEL
HINGE PIN AND (2)
STAINLESS STEEL
PUSH NUT FASTENERS

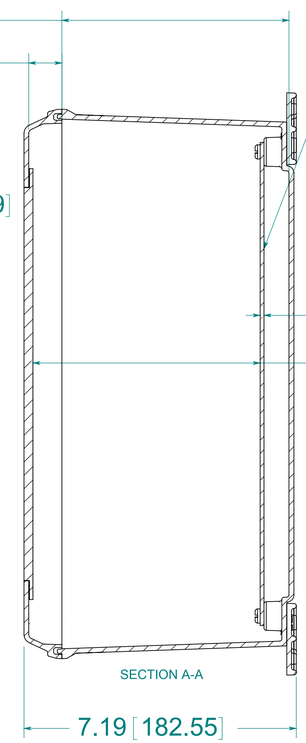

OPTIONAL BACK PANEL
0.100 [2.54] TH'K- ALUMINUM
0.075 [1.91] TH'K- WHITE STEEL
& GALVANNEALED
0.125 [3.18] TH'K- FIBERGLASS

.10 [2.54]

6.00 [152.37]

BACK VIEW

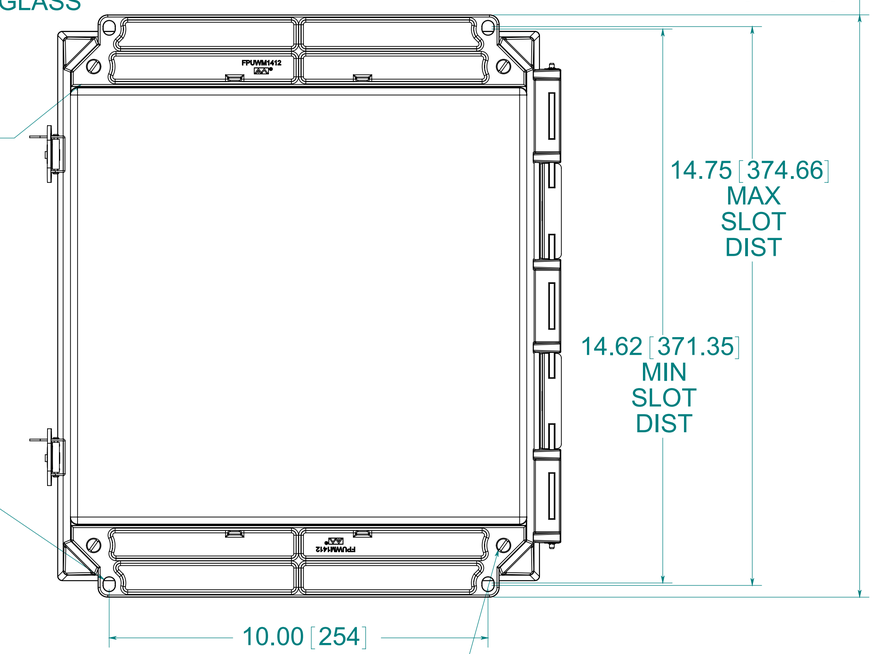

(2) POLYCARBONATE
FLANGES (GLUED)

(8) R.157 [3.98]

(4) EACH #10-32 BRASS
INSERTS, AND STAINLESS
STEEL FLANGE AND
FEET SCREWS

CLOSED CELL
NEOPRENE
GASKET

(2) STAINLESS STEEL
LOCKABLE TWIST LATCH

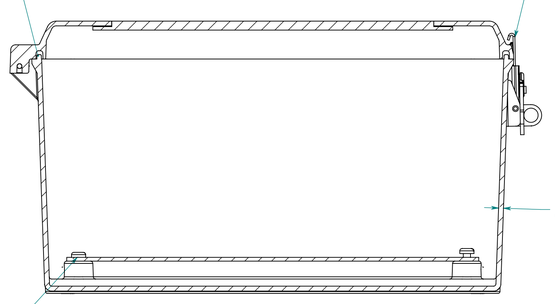

.13 [3.30]

SECTION B-B

(4) EACH #10-32 BRASS
INSERTS AND PLATED
CARBON STEEL SCREWS

FRONT VIEW
WITH COVER REMOVED
AND BACK PANEL DISPLAYED

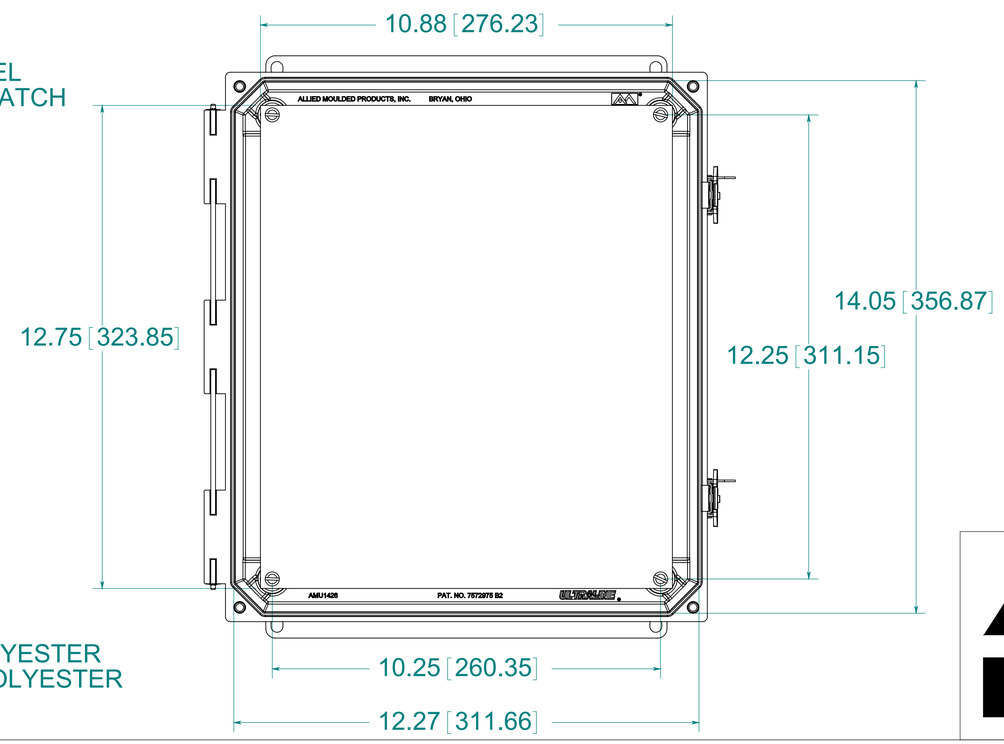

MATERIAL:
BOX-COMPRESSION MOLDED FIBERGLASS REINFORCED POLYESTER
COVER- COMPRESSION MOLDED FIBERGLASS REINFORCED POLYESTER
CLEAR COVER AND WINDOWS- POLYCARBONATE

PART No. PJU1426TWF
for more information visit
www.hammfg.com
Data subject to change without notice

Drawing Not to Scale