REV DATE: 08/12

DATE	REV.	DESCRIPTION	DR	CK	REL

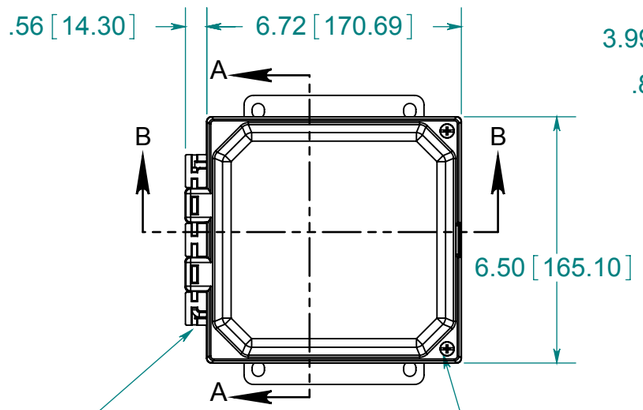

SECTION A-A

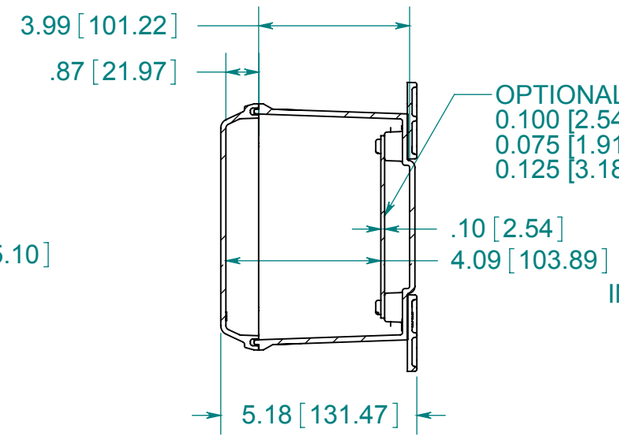

OPTIONAL BACK PANEL SHOWN
0.100 [2.54mm] TH'K- ALUMINUM
0.075 [1.91mm] TH'K- WHITE STEEL & GALVANNEALED
0.125 [3.18mm] TH'K- FIBERGLASS

BACK VIEW

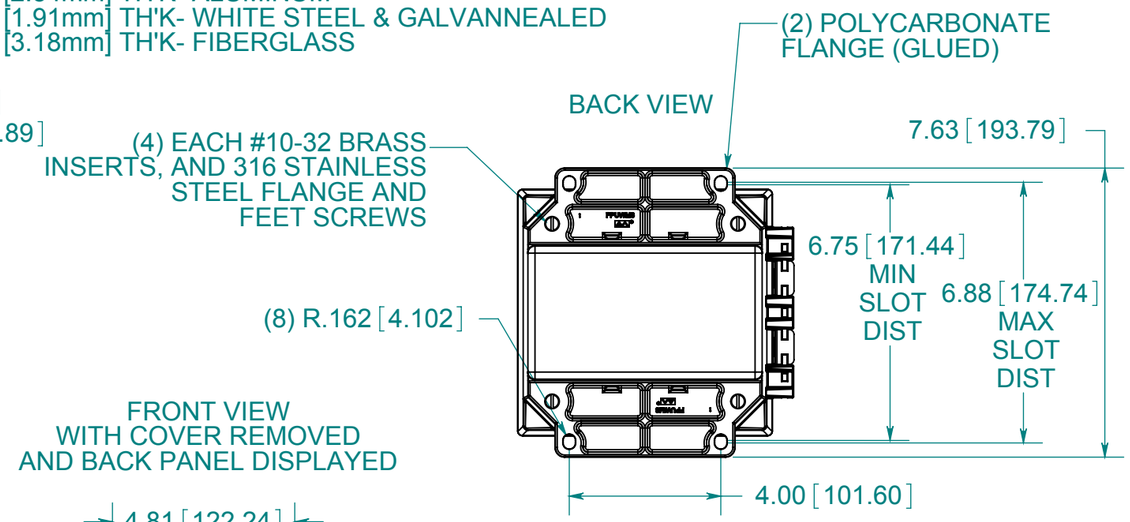

FRONT VIEW
WITH COVER REMOVED
AND BACK PANEL DISPLAYED

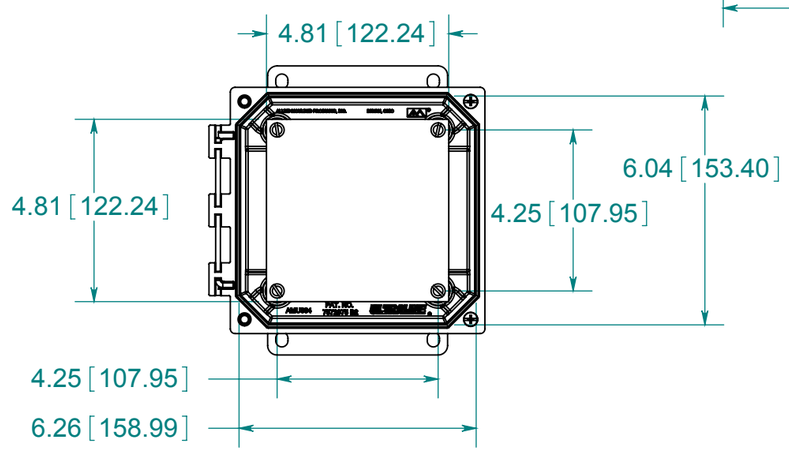

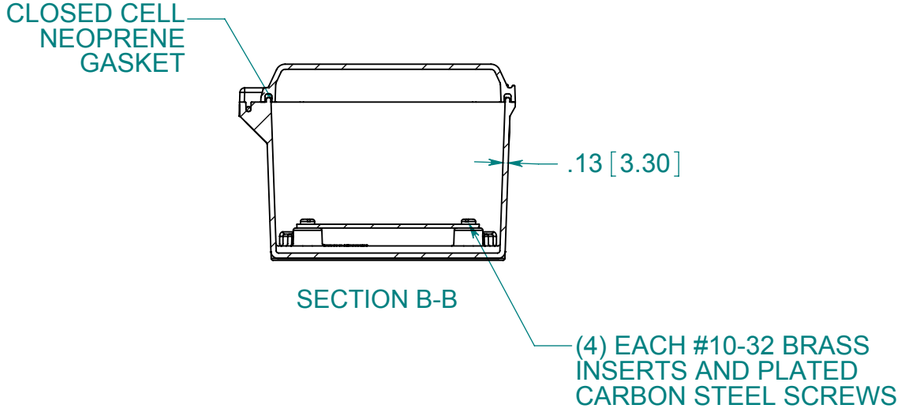

MATERIAL:
BOX- COMPRESSION MOLDED FIBERGLASS REINFORCED POLYESTER
COVER- COMPRESSION MOLDED FIBERGLASS REINFORCED POLYESTER
CLEAR COVER AND WINDOWS- POLYCARBONATE

PART No. PJU664CCHF
for more information visit
www.hammfg.com
Data subject to change without notice

Drawing Not to Scale