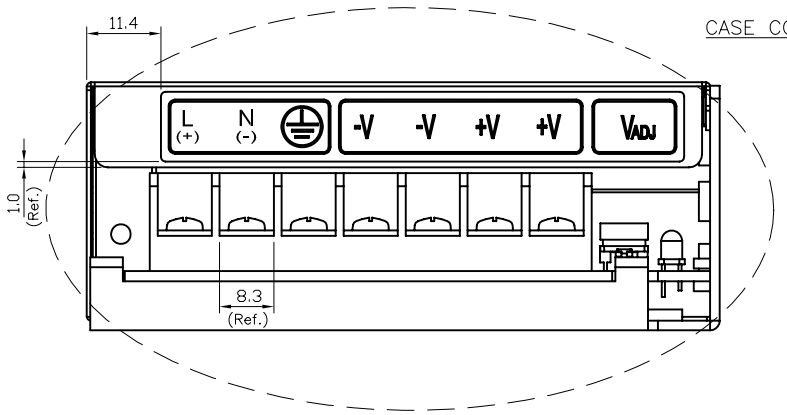

Detail "B"
Scale 2:1

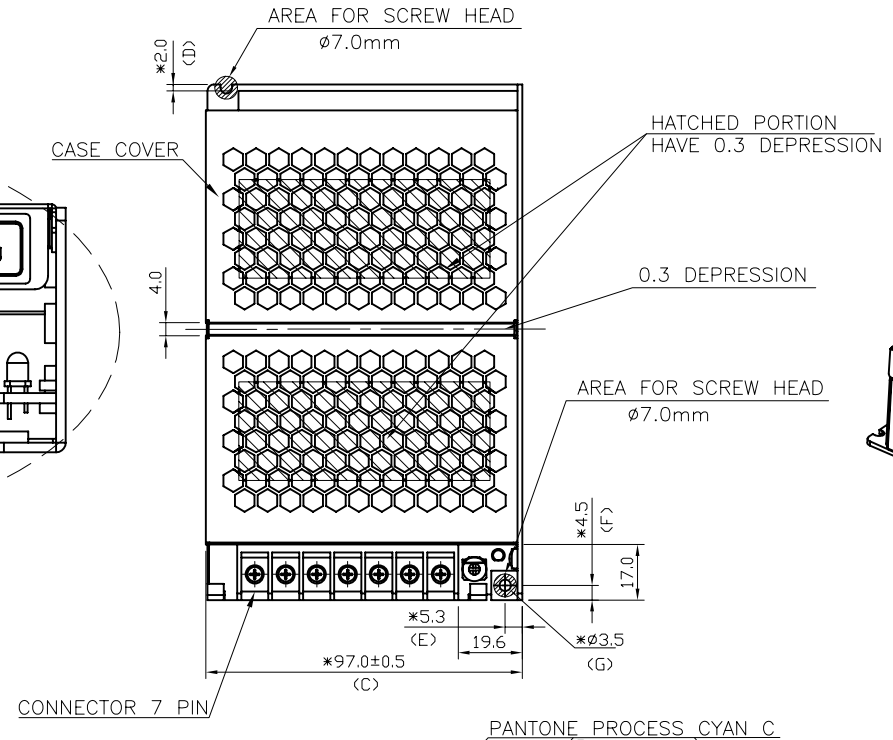

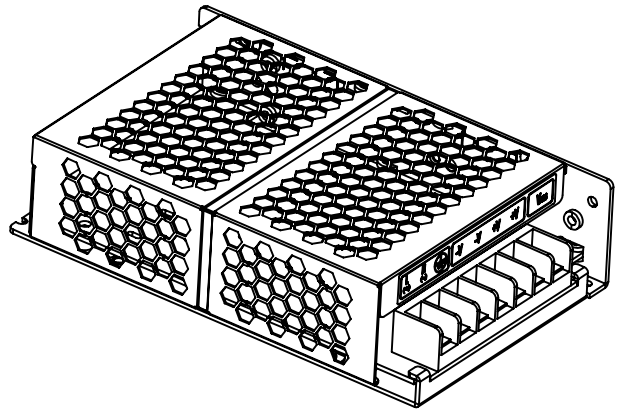

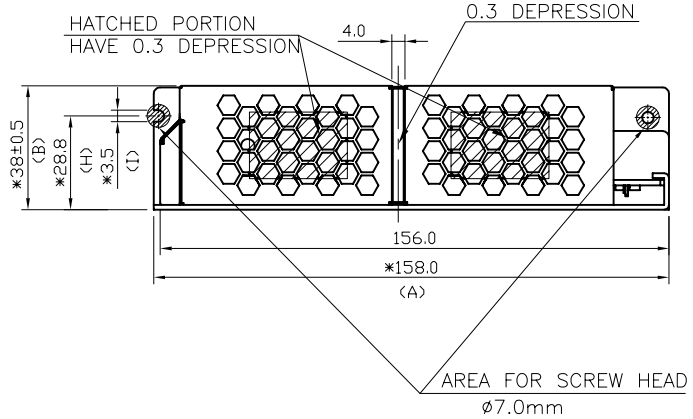

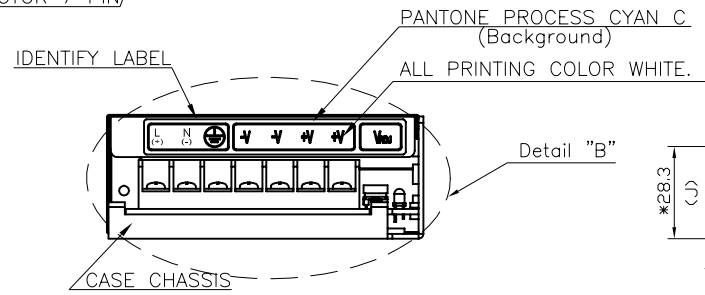

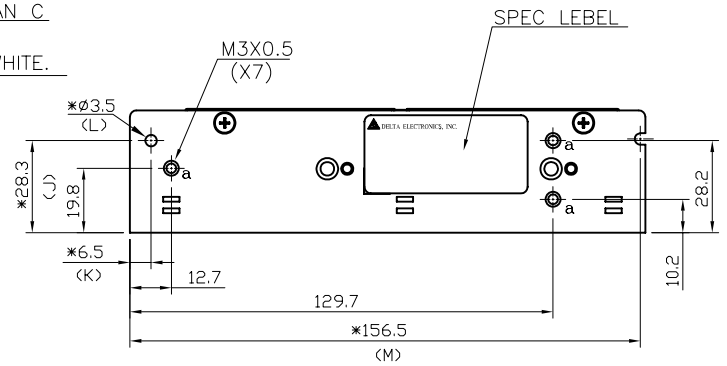

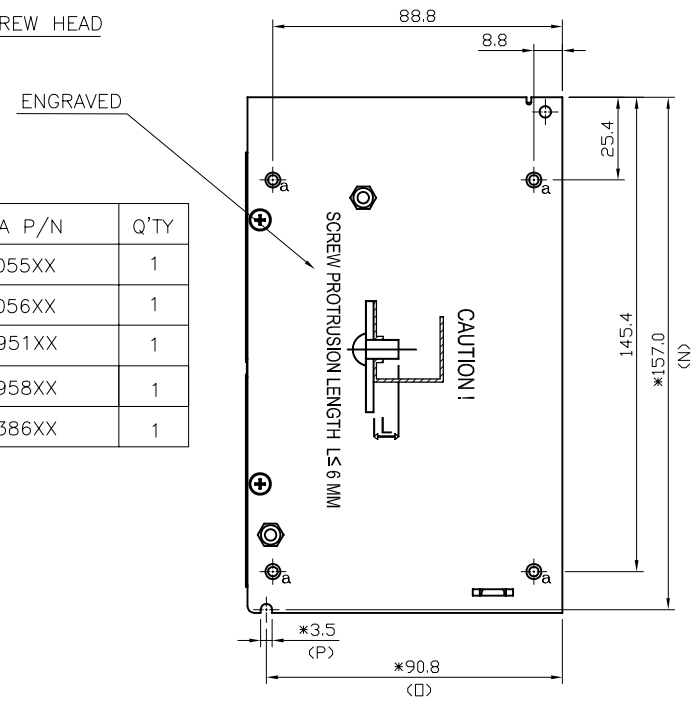

ITEM	DESCRIPTION	DELTA P/N	Q'TY
1	CASE CHASSIS	33030055XX	1
2	CASE COVER	33030056XX	1
3	CONNECTOR 7 PIN	30704951XX	1
4	SPEC LABEL	32680958XX	1
5	IDENTIFY LABEL	32620386XX	1

NOTES:

1. MARK (*) DIMENSIONS ARE CONTROL DIMENSION.
2. PRODUCT SURFACE SHOULD BE CLEAN, NO DENT AND FREE FROM TOOLING MARK.
3. SPEC LABEL DETAIL AND PRINTING CONTENTS REFER TO SN.
4. EXTRUDE HOLE WITH THREAD MUST MEET TORQUE 8.0 KG-CM(MIN.)
5. ENGRAVING ON CHASSIS MUST BE VISIBLE.
6. MUST MEET DELTA GENERAL STANDARD: 10000-0162.

REV.	ECN NO.
00	----------

台達電子工業股份有限公司
DELTA ELECTRONICS, INC.

DRAWN: | DESIGN:
DATE: | ECN NO.:

THESE DRAWINGS AND SPECIFICATIONS ARE THE PROPERTY OF DELTA ELECTRONICS, INC. AND SHALL NOT BE REPRODUCED OR USED AS THE BASIS FOR THE MANUFACTURE OR SELL OF APPARATUSES OR DEVICES WITHOUT PERMISSION.

DIMENSIONAL TOLERANCES

DECIMALS	( )	( )	( )	( )	ANGLES
X	<50 :±0.1	<50 :±0.15	<50 :±0.2	<30° :±0.1°	
X.X	:±0.3	>50~100 :±0.15	>50~100 :±0.2	>50~100 :±0.25	>30°~60°:±0.3°
X.XX	:±0.2	>100~200:±0.2	>100~200:±0.25	>100~200:±0.3	>60°~90°:±0.5°
X.XXX	:±0.1	>200~ :±0.2%	>200~ :±0.25%	>200~ :±0.3%	

DRAWING NAME: PHYSICAL DIMENSION DRAWING

A3 SIZE | THIRD ANGLE PROJECTION | PART NO.: PMC-24V100W1AA | REV.

USED ON | UNIT: mm | SCALE | SHEET 1 OF 1

DF-MEA3H-3R01