samtec

QSTRIP®

**(0,80 mm) .0315"**

**QTE SERIES**

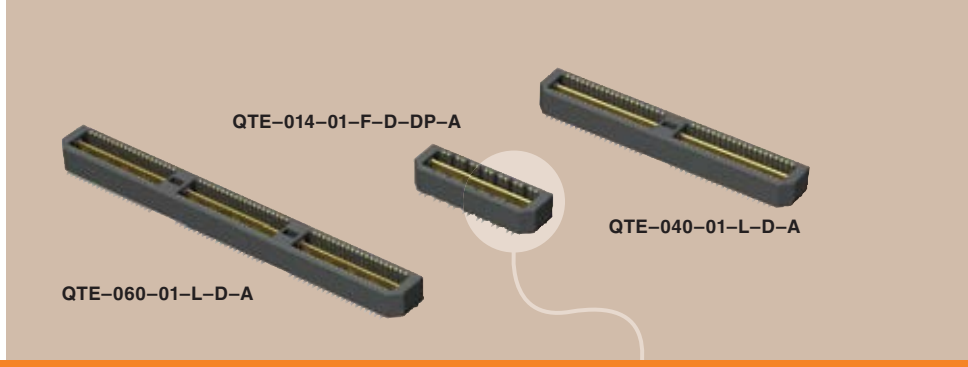


# HIGH SPEED GROUND PLANE HEADER

## SPECIFICATIONS

For complete specifications and recommended PCB layouts see www.samtec.com?QTE

**Insulator Material:**
Liquid Crystal Polymer
**Terminal Material:**
Phosphor Bronze
**Plating:**
Au or Sn over 50µ" (1,27 µm) Ni
**Current Rating:**
Contacts:
1.3A per contact @ 95°C
Ground Plane:
10.1A per ground plane @ 95°C
**Operating Temp Range:**
-55°C to +125°C
**Voltage Rating:**
225 VAC mated with QSE & 5 mm Stack Height
**Max Cycles:**
100
**RoHS Compliant:**
Yes

FILE NO. E111594

### Processing:

**Lead–Free Solderable:**
Yes
**SMT Lead Coplanarity:**
(0,10 mm) .004" max (020-060)
**Board Stacking:**
For applications requiring more than two connectors per board contact ipg@samtec.com

## APPLICATION SPECIFIC OPTION

- 14mm, 15 mm, 22 mm and 30 mm stack height (Caution: Some automatic placement/inspection machines may have component height restrictions. Please consult machinery specifications.)
- 30µ" (0,76 µm) Gold (Specify -H plating for Data Rate cable mating applications.)
- Edge Mount
- 56(-DP), 80, 100 positions per row
- Guide Posts, Screw Down & Friction Lock
- Retention Option

Call Samtec.

***Note:** –C Plating passes 10 year MFG testing

**Note:** Some lengths, styles and options are non-standard, non-returnable.

**Board Mates:**
QSE

**Cable Mates:**
EQCD, EQSD, EQDP, EQRF
(See Application Specific note)

E.L.P.™ EXTENDED LIFE PRODUCT
10 year Mixed Flowing Gas with 50µ" Gold
Call Samtec for maximum cycles mated with QSE

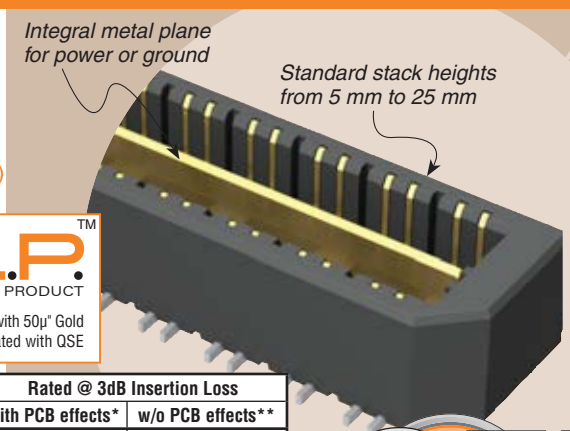


| QTE/QSE 5 mm Stack Height | Type | Rated @ 3dB Insertion Loss | |
|---|---|---|---|
| | | with PCB effects* | w/o PCB effects** |
| Single-Ended Signaling | –D | 9 GHz / 18 Gbps | 9 GHz / 18 Gbps |
| Differential Pair Signaling | –D | 8 GHz / 16 Gbps | 14 GHz / 28 Gbps |
| Differential Pair Signaling | –DP | 8.5 GHz / 17 Gbps | 13.5 GHz / 27 Gbps |

*Performance data includes effects of a non-optimized PCB.
**Test board losses de-embedded from performance data.

Performance data for other stack heights and complete test data available at www.samtec.com?QTE or contact sig@samtec.com

25+ Gbps

Final Inch® Break Out Region Performance Certified finalinch.com

**Protocols Supported**
100 GbE
XAUI
PCI Express®
SATA
MGT (Rocket I/O)
InfiniBand™
Download app notes at www.samtec.com/appnote
Contact SIG @ samtec.com for questions on protocols

**QTE – PINS PER ROW NO. OF PAIRS – LEAD STYLE – PLATING OPTION – TYPE – A – OTHER OPTION**

**–020, –040, –060**
(40 total pins per bank = –D)

**–014, –028, –042**
(14 pairs per bank = –D–DP)

**Specify LEAD STYLE from chart**

**–F**
= Gold Flash on Signal Pins and Ground Plane, Matte Tin on tails

**–L**
= 10µ" (0,25 µm) Gold on Signal Pins and Ground Plane, Matte Tin on tails

**–C***
= Electro-Polished Selective 50µ" (1,27 µm) min Au over 150µ" (3,81 µm) Ni on Signal Pins in contact area, 10µ" (0,25 µm) min Au over 50µ" (1,27 µm) Ni on Ground Plane in contact area, Matte Tin over 50µ" (1,27 µm) min Ni on all solder tails

**–D**
= Single-Ended

**–D–DP**
= Differential Pair (–01 only)

**–K**
= (7,00 mm) .275" DIA Polyimide Film Pick & Place Pad

**–TR**
= Tape & Reel Packaging (N/A on 56 & 80 positions or -05 & -07 lead style)

**–L**
= Latching Option (N/A on 42, 56, 60 & 80 positions)

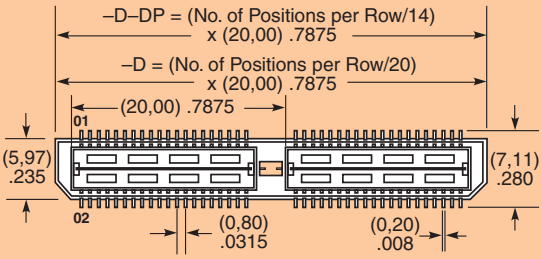


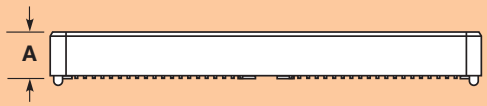


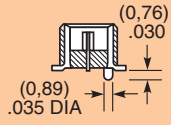


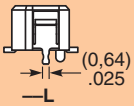


| QTE LEAD STYLE | A | HEIGHT WITH QSE* |
|---|---|---|
| –01 | (4,27) .168 | (5,00) .197 |
| –02 | (7,26) .286 | (8,00) .315 |
| –03 | (10,27) .404 | (11,00) .433 |
| –04 | (15,25) .600 | (16,00) .630 |
| –05 | (18,26) .718 | (19,00) .748 |
| –07 | (24,24) .954 | (25,00) .984 |

*Processing conditions will affect mated height.

## ALSO AVAILABLE

Board Spacing Standoffs. See SO Series.

*Due to technical progress, all designs, specifications and components are subject to change without notice.*



**SAMTEC USA** • Tel: 1-800-SAMTEC-9 or 812-944-6733 **SAMTEC NORTHERN CALIFORNIA** • Tel: 408-395-5900 **SAMTEC SOUTHERN CALIFORNIA** • Tel: 1-800-726-8329
**SAMTEC AMERICA LATINA COMERCIO EXTERIOR LTDA** • Tel: (+55 31) 3786 3227 **SAMTEC UNITED KINGDOM** • Tel: 44 01236 739292 **SAMTEC GERMANY** • Tel: +49 (0) 89 / 89460-0
**SAMTEC FRANCE** • Tel: 33 01 60 95 06 60 **SAMTEC ITALY** • Tel: 39 039 6890337 **SAMTEC NORDIC/BALTIC** • Tel: +46-84477280 **SAMTEC BENELUX** • Tel: 44 01236 739292
**SAMTEC ISRAEL** • Tel: 972-3-7526600 **SAMTEC INDIA** • Tel: +91-80-3272 1612 **SAMTEC ASIA PACIFIC** • Tel: 65 6745-5955 **SAMTEC JAPAN** • Tel: 045-475-1385 **SAMTEC CHINA** • Tel: 86-21-6083 3766
**SAMTEC TAIWAN** • Tel: 886-2-2735-6109 **SAMTEC HONG KONG** • Tel: 852-26904858 **SAMTEC KOREA** • Tel: 82-31-717-5685 **SAMTEC ANZ** • Tel: 613 9580 0683