N-Channel Logic Level Power MOSFET 50V, 16A, 47 mΩ

These are N-Channel logic level power MOSFETs manufactured using the MegaFET process. This process, which uses feature sizes approaching those of LSI integrated circuits gives optimum utilization of silicon, resulting in outstanding performance. They were designed for use with logic level (5V) driving sources in applications such as programmable controllers, switching regulators, switching converters, motor relay drivers and emitter switches for bipolar transistors. This performance is accomplished through a special gate oxide design which provides full rated conductance at gate biases in the 3V to 5V range, thereby facilitating true on-off power control directly from logic circuit supply voltages.

Formerly developmental type TA09871.

Ordering Information

PART NUMBER	PACKAGE	BRAND
RFD16N05LSM9A	TO-252AA	RFD16N05LSM

Features

- 16A, 50V
- $r_{DS(ON)} = 0.047\Omega$
- UIS SOA Rating Curve (Single Pulse)
- Design Optimized for 5V Gate Drives
- Can be Driven Directly from CMOS, NMOS, TTL Circuits
- SOA is Power Dissipation Limited
- Nanosecond Switching Speeds
- Linear Transfer Characteristics
- High Input Impedance
- Majority Carrier Device
- Related Literature
  - TB334 “Guidelines for Soldering Surface Mount Components to PC Boards”

Symbol

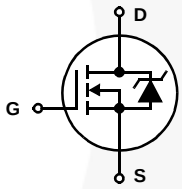

Packaging

JEDEC TO-252AA

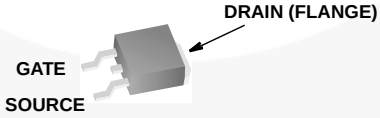

Absolute Maximum Ratings $T_C = 25^oC$, Unless Otherwise Specified

		RFD16N05LSM9A	UNITS
Drain to Source Voltage (Note 1)	V_{DS}	50	V
Drain to Gate Voltage (R_{GS} = 20kΩ) (Note 1)	V_{DGR}	50	V
Continuous Drain Current	I_D	16	A
Pulsed Drain Current (Note 3)	I_{DM}	45	A
Gate to Source Voltage	V_{GS}	±10	V
Maximum Power Dissipation	P_D	60	W
Derate Above 25^oC		0.48	$W/^oC$
Operating and Storage Temperature	T_J, T_{STG}	-55 to 150	^oC
Maximum Temperature for Soldering			
Leads at 0.063in (1.6mm) from Case for 10s	T_L	300	^oC
Package Body for 10s, See Techbrief 334	T_{pkg}	260	^oC

CAUTION: Stresses above those listed in "Absolute Maximum Ratings" may cause permanent damage to the device. This is a stress only rating and operation of the device at these or any other conditions above those indicated in the operational sections of this specification is not implied.

NOTE:

1. $T_J = 25^oC$ to 125^oC.

Electrical Specifications $T_C = 25^oC$, Unless Otherwise Specified

PARAMETER	SYMBOL	TEST CONDITIONS		MIN	TYP	MAX	UNITS
Drain to Source Breakdown Voltage	BV_{DSS}	I_D = 250mA, V_{GS} = 0V, Figure 10		50	-	-	V
Gate to Threshold Voltage	$V_{GS(TH)}$	$V_{GS} = V_{DS}$, I_D = 250mA, Figure 9		1	-	2	V
Zero Gate Voltage Drain Current	I_{DSS}	V_{DS} = 40V, V_{GS} = 0V		-	-	1	µA
			$T_C = 150^oC$	-	-	50	µA
Gate to Source Leakage Current	I_{GSS}	V_{GS} = ±10V, V_{DS} = 0V		-	-	100	nA
Drain to Source On Resistance (Note 2)	$r_{DS(ON)}$	I_D = 16A, V_{GS} = 5V		-	-	0.047	Ω
		I_D = 16A, V_{GS} = 4V		-	-	0.056	Ω
Turn-On Time	$t_{(ON)}$	V_{DD} = 25V, I_D = 8A, V_{GS} = 5V, R_{GS} = 12.5Ω Figures 15, 16		-	-	60	ns
Turn-On Delay Time	$t_{d(ON)}$			-	14	-	ns
Rise Time	t_r			-	30	-	ns
Turn-Off Delay Time	$t_{d(OFF)}$			-	42	-	ns
Fall Time	t_f			-	14	-	ns
Turn-Off Time	$t_{(OFF)}$			-	-	100	ns
Total Gate Charge	$Q_{g(TOT)}$	V_{GS} = 0V to 10V	V_{DD} = 40V, I_D = 16A, R_L = 2.5Ω Figures 17, 18	-	-	80	nC
Gate Charge at 5V	$Q_{g(5)}$	V_{GS} = 0V to 5V		-	-	45	nC
Threshold Gate Charge	$Q_{g(TH)}$	V_{GS} = 0V to 1V		-	-	3	nC
Thermal Resistance Junction to Case	$R_{\theta JC}$			-	-	2.083	$^oC/W$
Thermal Resistance Junction to Ambient	$R_{\theta JA}$			-	-	100	$^oC/W$

Source to Drain Diode Specifications

PARAMETER	SYMBOL	TEST CONDITIONS	MIN	TYP	MAX	UNITS
Source to Drain Diode Voltage	V_{SD}	I_{SD} = 16A	-	-	1.5	V
Diode Reverse Recovery Time	t_{rr}	I_{SD} = 16A, dI_{SD}/dt = 100A/µs	-	-	125	ns

NOTES:

2. Pulse Test: Pulse Width ≤300ms, Duty Cycle ≤2%.
3. Repetitive Rating: Pulse Width limited by max junction temperature.

Typical Performance Curves Unless Otherwise Specified

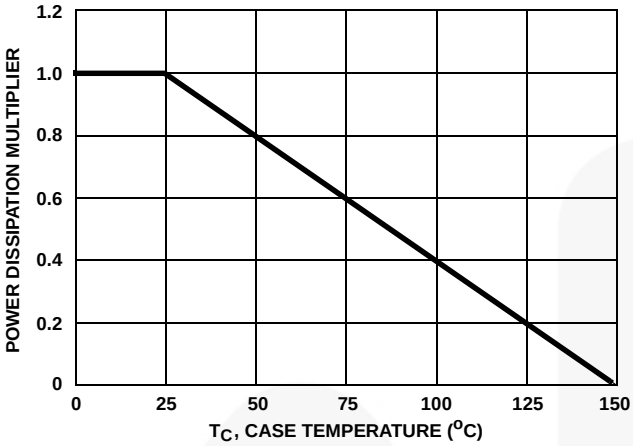

FIGURE 1. NORMALIZED POWER DISSIPATION vs CASE TEMPERATURE

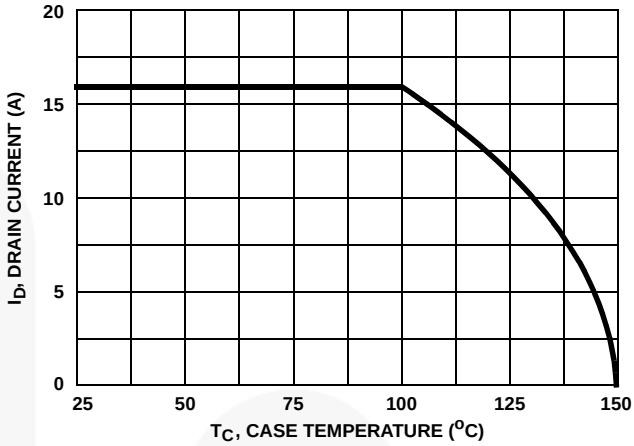

FIGURE 2. MAXIMUM CONTINUOUS DRAIN CURRENT vs CASE TEMPERATURE

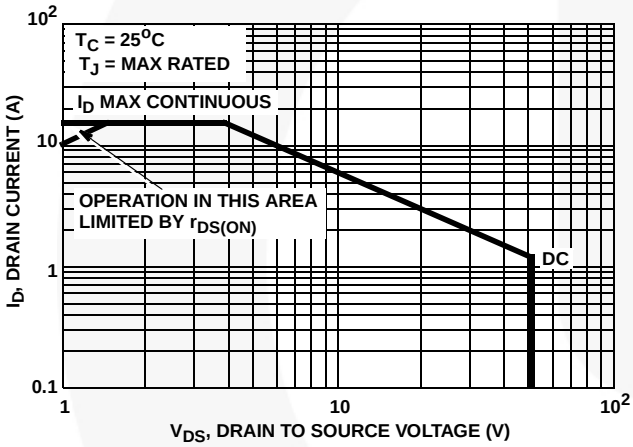

FIGURE 3. FORWARD BIAS SAFE OPERATING AREA

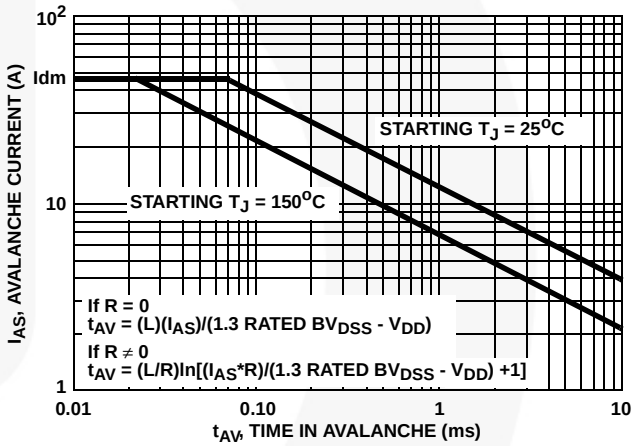

FIGURE 4. UNCLAMPED INDUCTIVE SWITCHING SOA (SINGLE PULSE UIS SOA)

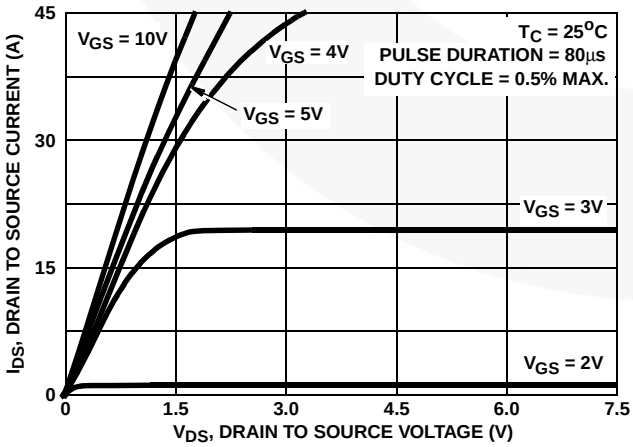

FIGURE 5. SATURATION CHARACTERISTICS

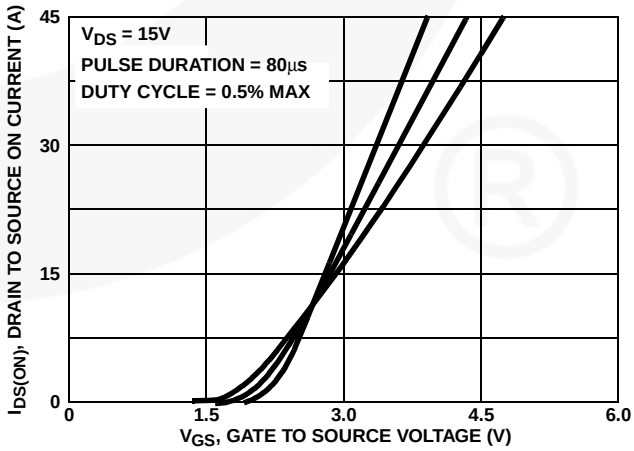

FIGURE 6. TRANSFER CHARACTERISTICS

Typical Performance Curves Unless Otherwise Specified **(Continued)**

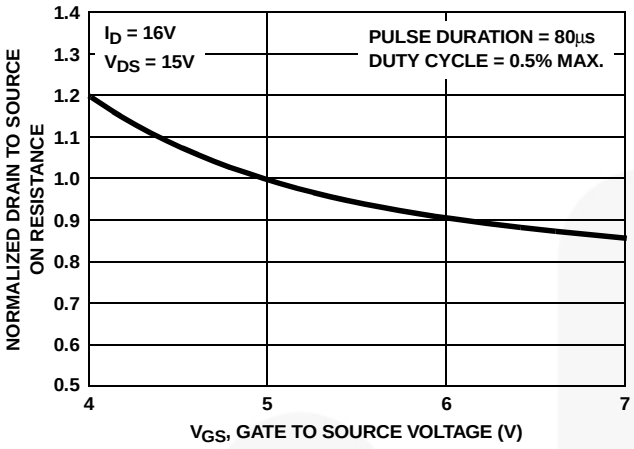

FIGURE 7. DRAIN TO SOURCE ON RESISTANCE vs GATE VOLTAGE AND DRAIN CURRENT

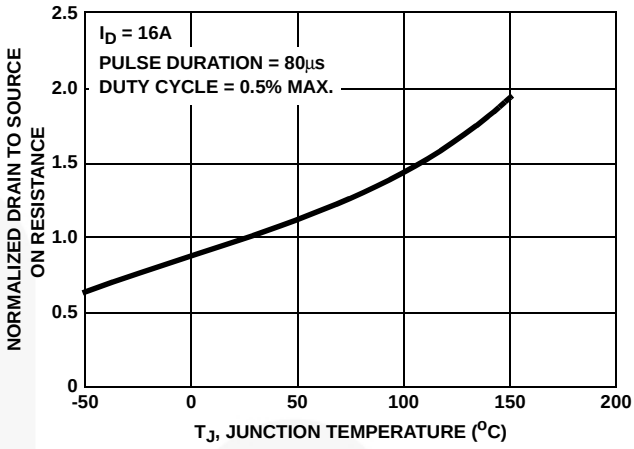

FIGURE 8. NORMALIZED DRAIN TO SOURCE ON RESISTANCE vs JUNCTION TEMPERATURE

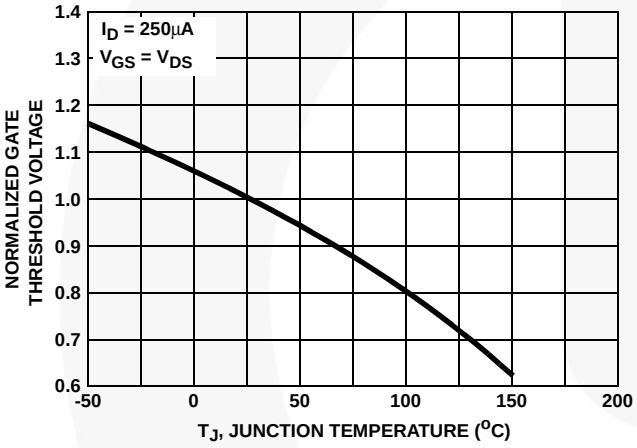

FIGURE 9. NORMALIZED GATE THRESHOLD vs JUNCTION TEMPERATURE

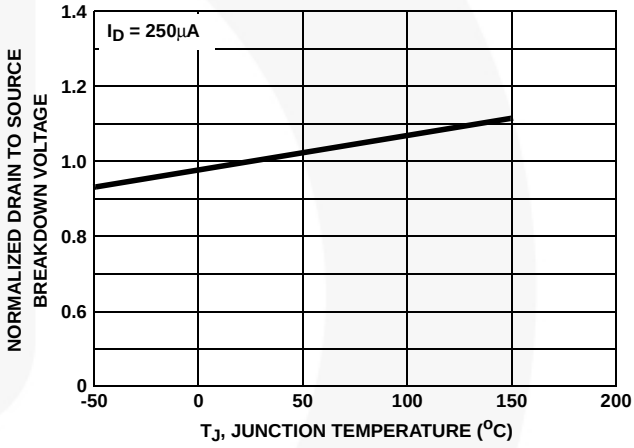

FIGURE 10. NORMALIZED DRAIN TO SOURCE BREAKDOWN VOLTAGE vs JUNCTION TEMPERATURE

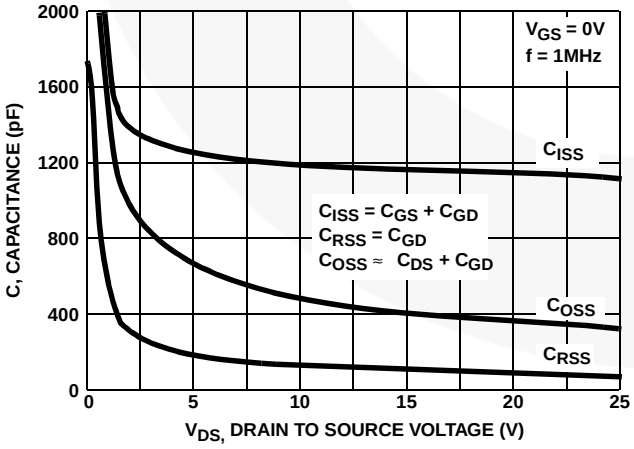

FIGURE 11. CAPACITANCE vs DRAIN TO SOURCE VOLTAGE

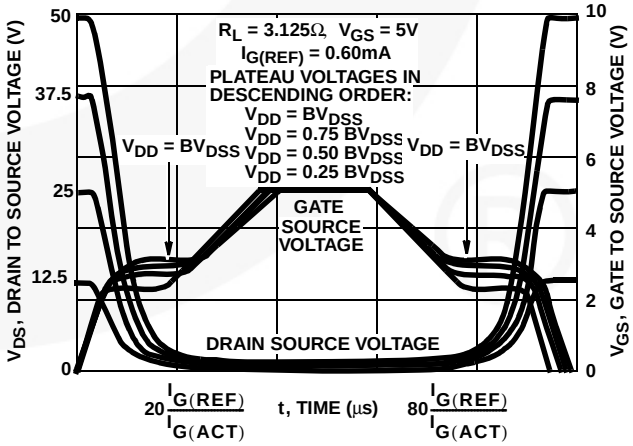

FIGURE 12. NORMALIZED SWITCHING WAVEFORMS FOR CONSTANT GATE CURRENT

Test Circuits and Waveforms

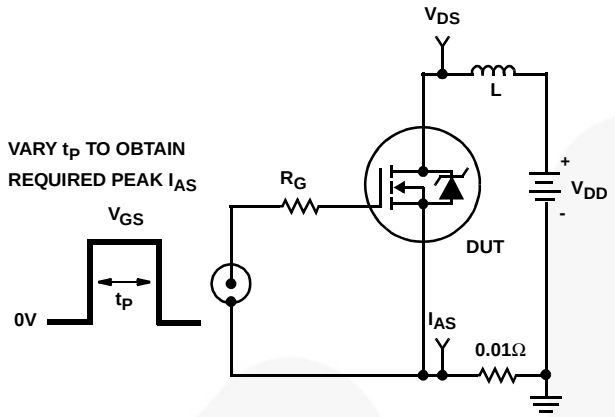

FIGURE 13. UNCLAMPED ENERGY TEST CIRCUIT

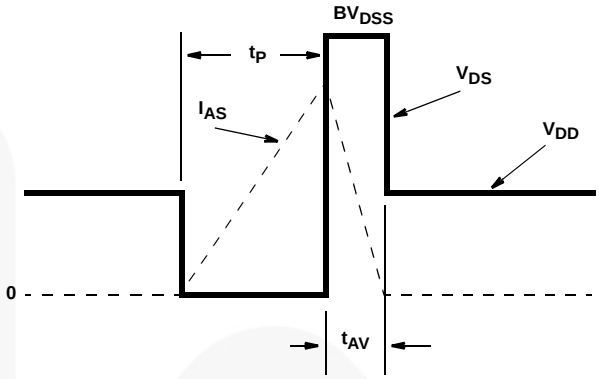

FIGURE 14. UNCLAMPED ENERGY WAVEFORMS

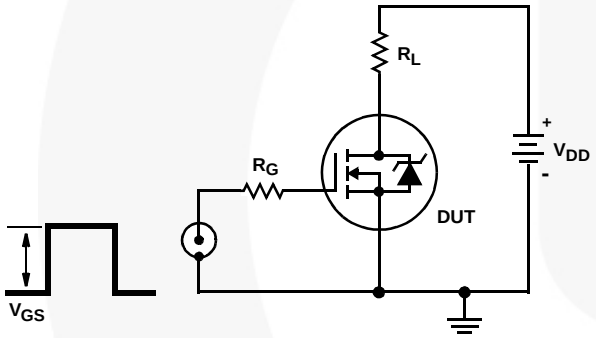

FIGURE 15. SWITCHING TIME TEST CIRCUIT

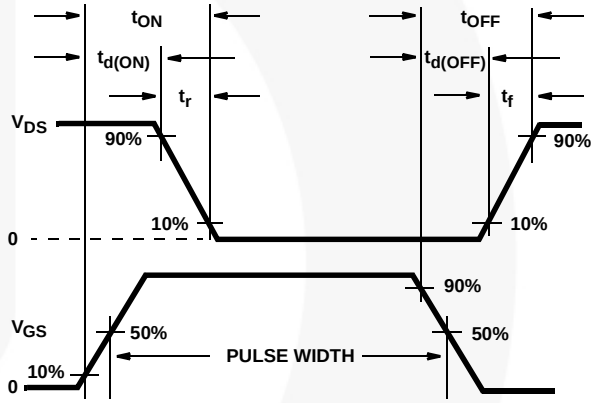

FIGURE 16. RESISTIVE SWITCHING WAVEFORMS

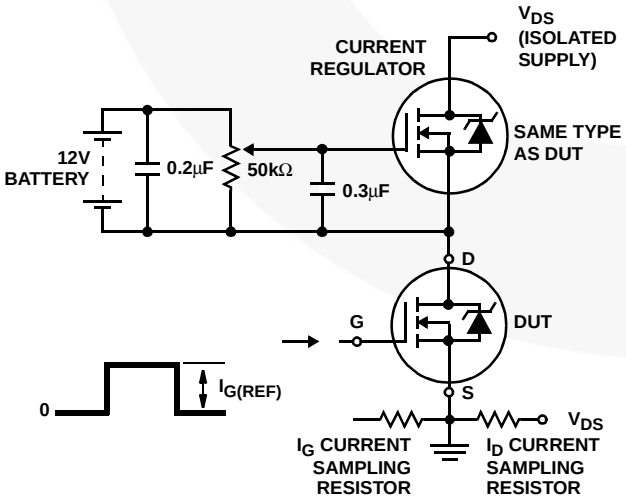

FIGURE 17. GATE CHARGE TEST CIRCUIT

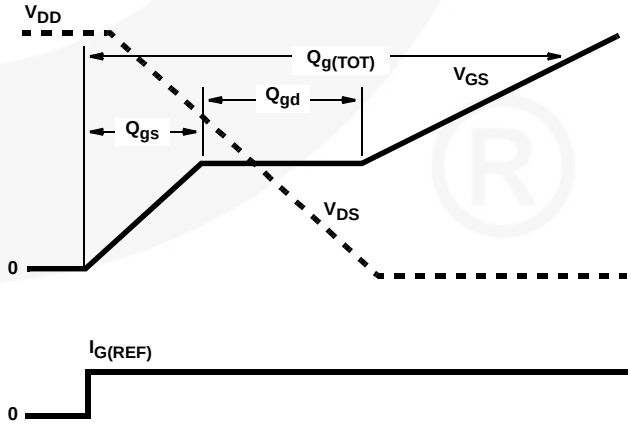

FIGURE 18. GATE CHARGE WAVEFORMS

PSPICE Electrical Model

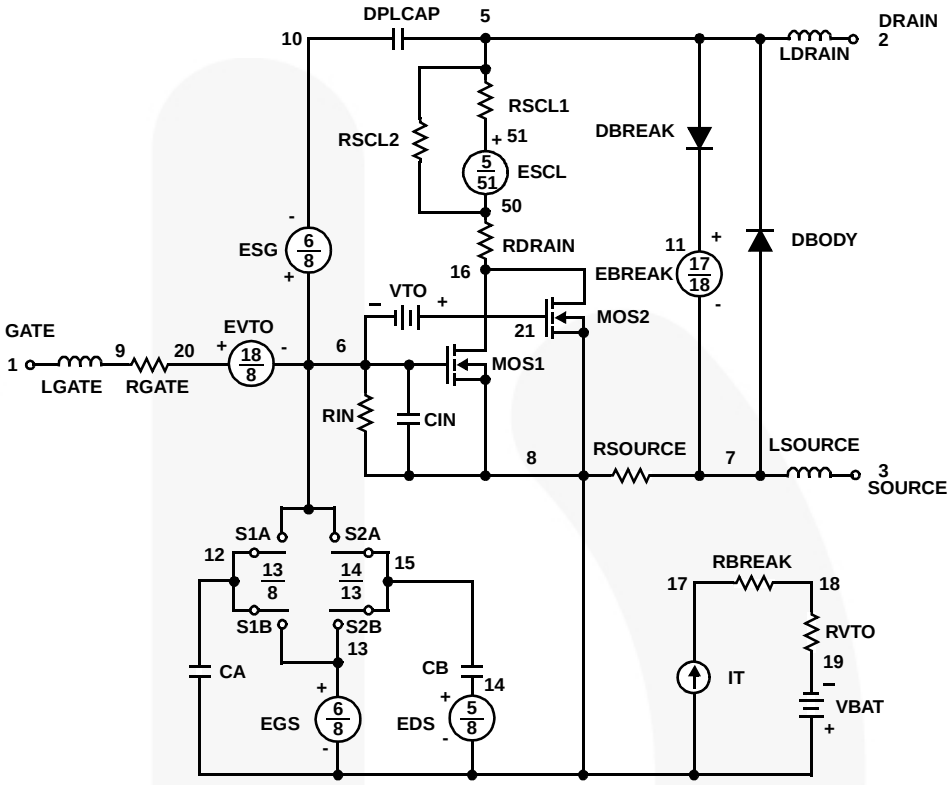


```
.SUBCKT RFD16N05L 2 1 3 ; REV 4/8/92

Ca 12 8 3.33e-9
Cb 15 14 3.11e-9
Cin 6 8 1.21e-9

Dbody 7 5 DBDMOD
Dbreak 5 11 DBKMOD
Dplcap 10 5 DPLCAPMOD

Ebreak 11 7 17 18 70.9
Eds 14 8 5 8 1
Egs 13 8 6 8 1
Esg 6 10 6 8 1
Evto 20 6 18 8 1

IT  8  17  1

Lgate 1 9 1.38e-9
Ldrain 2 5 1.0e-12
Lsource 3 7 1.0e-9

Mos1 16 6 8 8 MOSMOD M=0.99
Mos2 16 21 8 8 MOSMOD M=0.01

Rin 6 8 1e9
Rbreak 17 18 RBKMOD 1
Rdrain 5 16 RDSMOD 27.38e-3
Rgate 9 20 2.98
Rsource 8 7 RDSMOD 0.614e-3
Rvto 18 19 RVTOMOD 1

S1a 6 12 13 8 S1AMOD
S1b 13 12 13 8 S1BMOD
S2a 6 15 14 13 S2AMOD
S2b 13 15 14 13 S2BMOD

Vbat 8 19 DC 1
Vto 21 6 0.448

.MODEL DBDMOD D (IS=1.34e-13 RS=1.21e-2 TRS1=1.64e-3 TRS2=2.59e-6
+CJO=1.13e-9 TT=4.14e-8)
.MODEL DBKMOD D (RS=8.82e-2 TRS1=-2.01e-3 TRS2=7.32e-10)
.MODEL DPLCAPMOD D (CJO=0.522e-9 IS=1e-30 N=10)
.MODEL MOSMOD NMOS (VTO=2.054 KP=24.73 IS=1e-30 N=10 TOX=1 L=1u W=1u)
.MODEL RBKMOD RES (TC1=1.01e-3 TC2=5.21e-8)
.MODEL RDSMOD RES (TC1=3.66e-3 TC2=1.46e-5)
.MODEL RVTOMOD RES (TC1=-1.81e-3 TC2=1.41e-6)
.MODEL S1AMOD VSWITCH(RON=1e-5 ROFF=0.1 VON=-4.25 VOFF=-2.25)
.MODEL S1BMOD VSWITCH(RON=1e-5 ROFF=0.1 VON=-2.25 VOFF=-4.25)
.MODEL S2AMOD VSWITCH(RON=1e-5 ROFF=0.1 VON=-0.65 VOFF=4.35)
.MODEL S2BMOD VSWITCH(RON=1e-5 ROFF=0.1 VON=4.35 VOFF=-0.65)

.ENDS
```

NOTE: For further discussion of the PSPICE model, consult **A New PSPICE Sub-Circuit for the Power MOSFET Featuring Global Temperature Options**; written by William J. Hepp and C. Frank Wheatley.

FAIRCHILD SEMICONDUCTOR®

TRADEMARKS

The following includes registered and unregistered trademarks and service marks, owned by Fairchild Semiconductor and/or its global subsidiaries, and is not intended to be an exhaustive list of all such trademarks.

AccuPower™
AX-CAP®*
BitSiC™
Build it Now™
CorePLUS™
CorePOWER™
CROSSVOLT™
CTL™
Current Transfer Logic™
DEUXPEED®
Dual Cool™
EcoSPARK®
EfficentMax™
ESBC™
F®
Fairchild®
Fairchild Semiconductor®
FACT Quiet Series™
FACT®
FAST®
FastvCore™
FETBench™
FPS™
F-PFS™
FRFET®
Global Power Resource℠
GreenBridge™
Green FPS™
Green FPS™ e-Series™
G*max*™
GTO™
IntelliMAX™
ISOPLANAR™
Marking Small Speakers Sound Louder and Better™
MegaBuck™
MICROCOUPLER™
MicroFET™
MicroPak™
MicroPak2™
MillerDrive™
MotionMax™
mWSaver®
OptoHiT™
OPTOLOGIC®
OPTOPLANAR®
®
PowerTrench®
PowerXS™
Programmable Active Droop™
QFET®
QS™
Quiet Series™
RapidConfigure™
™
Saving our world, 1mW/W/kW at a time™
SignalWise™
SmartMax™
SMART START™
Solutions for Your Success™
SPM®
STEALTH™
SuperFET®
SuperSOT™-3
SuperSOT™-6
SuperSOT™-8
SupreMOS®
SyncFET™
Sync-Lock™
SYSTEM GENERAL ®*
TinyBoost®
TinyBuck®
TinyCalc™
TinyLogic®
TINYOPTO™
TinyPower™
TinyPWM™
TinyWire™
TranSiC™
TriFault Detect™
TRUECURRENT®*
µSerDes™
µSerDes™
UHC®
Ultra FRFET™
UniFET™
VCX™
VisualMax™
VoltagePlus™
XS™

*Trademarks of System General Corporation, used under license by Fairchild Semiconductor.

DISCLAIMER

FAIRCHILD SEMICONDUCTOR RESERVES THE RIGHT TO MAKE CHANGES WITHOUT FURTHER NOTICE TO ANY PRODUCTS HEREIN TO IMPROVE RELIABILITY, FUNCTION, OR DESIGN. FAIRCHILD DOES NOT ASSUME ANY LIABILITY ARISING OUT OF THE APPLICATION OR USE OF ANY PRODUCT OR CIRCUIT DESCRIBED HEREIN; NEITHER DOES IT CONVEY ANY LICENSE UNDER ITS PATENT RIGHTS, NOR THE RIGHTS OF OTHERS. THESE SPECIFICATIONS DO NOT EXPAND THE TERMS OF FAIRCHILD'S WORLDWIDE TERMS AND CONDITIONS, SPECIFICALLY THE WARRANTY THEREIN, WHICH COVERS THESE PRODUCTS.

LIFE SUPPORT POLICY

FAIRCHILD'S PRODUCTS ARE NOT AUTHORIZED FOR USE AS CRITICAL COMPONENTS IN LIFE SUPPORT DEVICES OR SYSTEMS WITHOUT THE EXPRESS WRITTEN APPROVAL OF FAIRCHILD SEMICONDUCTOR CORPORATION.

As used here in:

1. Life support devices or systems are devices or systems which, (a) are intended for surgical implant into the body or (b) support or sustain life, and (c) whose failure to perform when properly used in accordance with instructions for use provided in the labeling, can be reasonably expected to result in a significant injury of the user.
2. A critical component in any component of a life support, device, or system whose failure to perform can be reasonably expected to cause the failure of the life support device or system, or to affect its safety or effectiveness.

ANTI-COUNTERFEITING POLICY

Fairchild Semiconductor Corporation's Anti-Counterfeiting Policy. Fairchild's Anti-Counterfeiting Policy is also stated on our external website, www.Fairchildsemi.com, under Sales Support.

Counterfeiting of semiconductor parts is a growing problem in the industry. All manufactures of semiconductor products are experiencing counterfeiting of their parts. Customers who inadvertently purchase counterfeit parts experience many problems such as loss of brand reputation, substandard performance, failed application, and increased cost of production and manufacturing delays. Fairchild is taking strong measures to protect ourselves and our customers from the proliferation of counterfeit parts. Fairchild strongly encourages customers to purchase Fairchild parts either directly from Fairchild or from Authorized Fairchild Distributors who are listed by country on our web page cited above. Products customers buy either from Fairchild directly or from Authorized Fairchild Distributors are genuine parts, have full traceability, meet Fairchild's quality standards for handing and storage and provide access to Fairchild's full range of up-to-date technical and product information. Fairchild and our Authorized Distributors will stand behind all warranties and will appropriately address and warranty issues that may arise. Fairchild will not provide any warranty coverage or other assistance for parts bought from Unauthorized Sources. Fairchild is committed to combat this global problem and encourage our customers to do their part in stopping this practice by buying direct or from authorized distributors.

PRODUCT STATUS DEFINITIONS

Definition of Terms

Datasheet Identification	Product Status	Definition
Advance Information	Formative / In Design	Datasheet contains the design specifications for product development. Specifications may change in any manner without notice.
Preliminary	First Production	Datasheet contains preliminary data; supplementary data will be published at a later date. Fairchild Semiconductor reserves the right to make changes at any time without notice to improve design.
No Identification Needed	Full Production	Datasheet contains final specifications. Fairchild Semiconductor reserves the right to make changes at any time without notice to improve the design.
Obsolete	Not In Production	Datasheet contains specifications on a product that is discontinued by Fairchild Semiconductor. The datasheet is for reference information only.

Rev. I66