PART NO.	"d2"	"h1"	"d1" NOMINAL DIA.	"h2"	"D"	"d3"	"d4"
RGS2-12462	.500 [12.7]	.126 [3.2]	.381 [9.7]	1.398 [35.5]	.594 [15.1]	.469 [11.9]	.563 [14.3]
RGS2-51409		.031 [0.8]	.344 [8.7]	1.055 [26.8]	.752 [19.1]	.480 [12.2]	.594 [15.1]

AVAILABLE BY SPECIAL ORDER

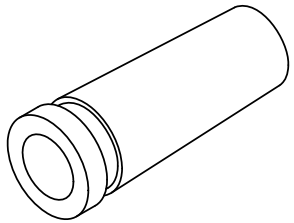

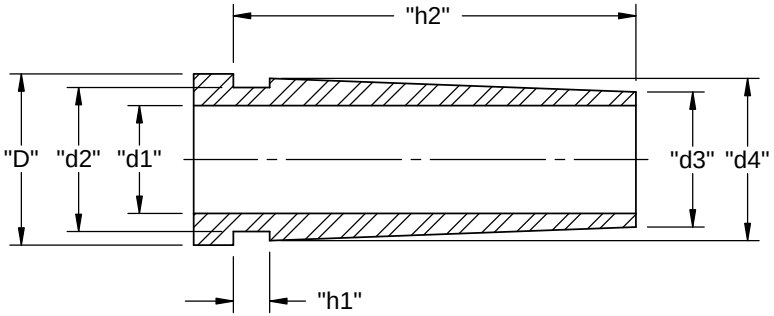

NOTES:
1. MATERIAL: PVC (RMS-25)
2. COLOR: BLACK

REV.	DESCRIPTION	ENGR.	DATE
E	DIMENSION FROM .374[9.5] TO .381[9.7], ECN# 1385	DZ	10/24/2013
D	SEE CO 200604 FOR CHANGES	SK	12/01/2010
C	SEE ECN #1148 FOR CHANGES	SJ	03/29/2006
B	SEE ECN #606 FOR CHANGES	SM	03/31/2003
A	SEE ECN #541 FOR CHANGES	SM	12/12/2002

TITLE: RICHCO GROMMET SLEEVE - TYPE 2

UNITS: IN [mm]

CREATED USING SOLIDWORKS

TOLERANCES UNLESS NOTED
.XX=±.020
.XXX=±.015
FRAC.=±1/32
ANG.=±1°

FILE #: RGS2
SHEET: 1 OF 1
SHEET SIZE: A
DWN: S.J.
DT: 07.15.02
APP:
CHKD:
FINAL

RE: RICHCO, INC.

RICHCO, INC.
ENG@RICHCO-INC.COM
(773) 539-4060

PART # SEE TABLE

PRINT TYPE CA