FO-55118-A

HONEYWELL PART NUMBER
RPNS090AC1A21X

REV	CHANGE DOCUMENT	CHANGED BY	CHECK
A	0040247	VS 23JUN08	BLR

Technical Data	
Function	**Angular Sensor**
Sensor principle	Contact-free, Hall effect
Measuring range	**90°**
Mechanical end stop	No
Supply voltage	5 V
Current consumption max.	20 mA
Output signal	
Angle /°	Output signal
L (45°)	4,75 VDC
0°	2,5 VDC
R (45°)	0,25 VDC
Delay of the output signal	ca. 3 ms
Reverse polarity protection	No
Output	24h short –circuit proof
EMC	200V/m acc. to ISO 11452-3
Ambient conditions	
Operating temperature:	- 40°C bis + 85°C
Temperature range (storage)	- 40°C bis + 125°C
protection class	IP67 acc. to DIN 40050
Tightening torque of the mounting screw max.	2,5 Nm ± 0,5 Nm
Accuracy	±1,6% / 2mV/°
Hysteresis	None
Linearity	± 2°
Cycles of rotation	30 x 10^6 cycles

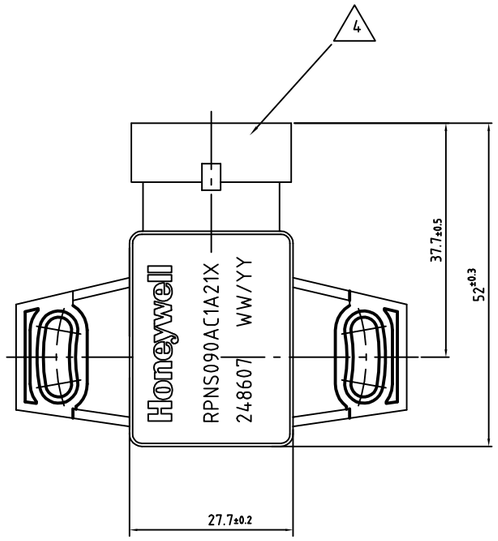

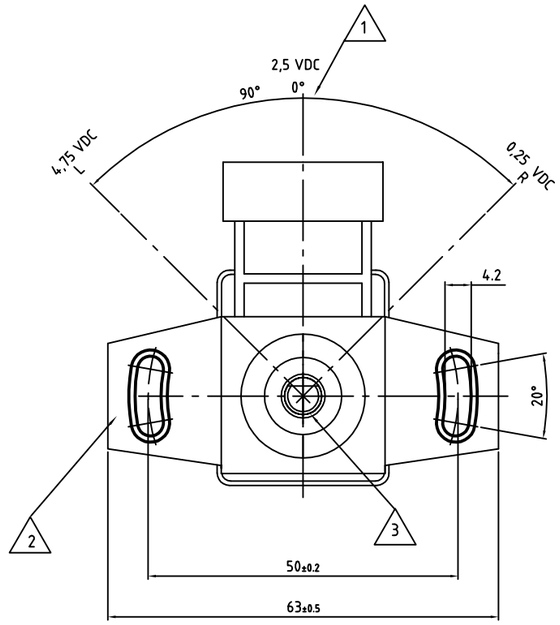

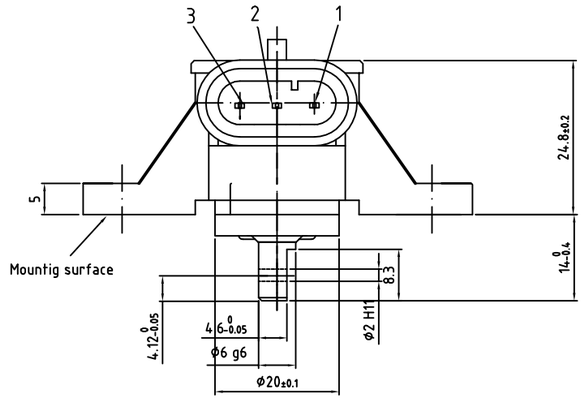

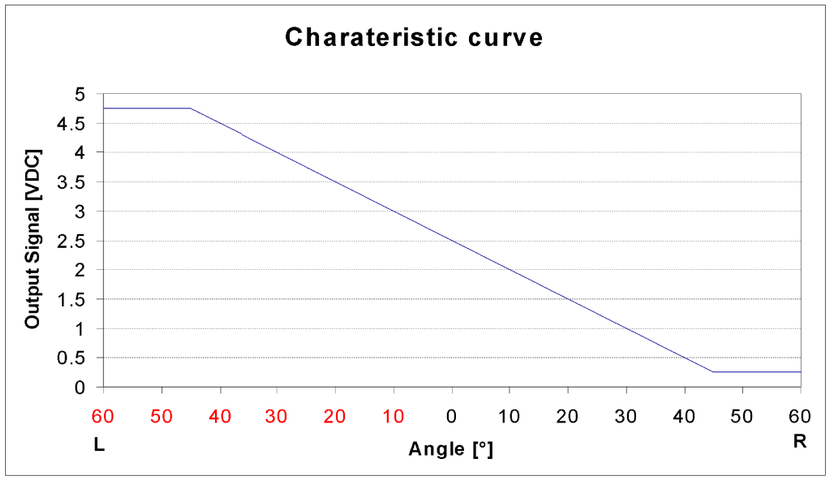

1 Zero point

2 Housing Material
PA66

Φ6	g6	-0.004 -0.012	5.996 5.988
Φ2	H11	+0.06 0	2.06 2
Dimension	Tolerance		

3 Shaft Material
Stainless Steel

4 Tab Connector acc. to AMP
Superseal 1.5 Series 282105
Shall mate with receptacle
Connector 282087-1

Pin configuration	
1	GND
2	Ub 5 VDC
3	4.75-0.25 VDC

DESIGN UNITS: MM
TOLERANCES UNLESS NOTED:

GEOMETRICAL TOLERANCE
ACCORDING TO DIN ISO 1101
GENERAL TOLERANCES
ACCORDING TO DIN 16901-130B

THIRD ANGLE PROJECTION

DRAWN	JA	19JUN08
CHECK	JLH	19JUN08

THIS DRAWING COVERS A PROPRIETARY ITEM
AND IS THE PROPERTY OF HONEYWELL.
THIS DRAWING IS NOT TO BE COPIED OR USED
WITHOUT THE PERMISSION OF HONEYWELL.

INTERPRET PER ASME Y14.5M-1994
OTHER HONEYWELL ENGINEERING
STANDARDS MAY APPLY

AutoCad 2D

Honeywell

TITLE
ANGULAR SENSOR ±45º

SIZE	TYPE	DRAWING NAME	REV
A3	I	RPNS090AC1A21X	A

SCALE -
SHEET 1 OF 1