Mallory Sonalert Products,Inc.	Part #: SCE028XD3QP1B
Sales Outline Drawing	Revision: **B**

Specifications:

Sound Level Category	Extra Loud
Mode of Operation	Quick Beep @ 60 PPS
Voltage Rating	16 to 28 VDC
Frequency	2900 ± 500 Hz
Loudness @ 2 FT	95 to 105 dB(A) Typ.
Current Draw	40mA MAX
Housing Material	6/6 Nylon, Color: Black
Storage Temperature	-40° to +85° C
Operating Temperature	-40° to +85° C
Panel Mounting	Recommended hole size is 1.25"(31.75mm). Thread front will fit standard 30mm(1.181") hole.
Knurled Nut	Used to attach part to panel. The max recommended torque is 10 in-lbs.
Weight (Typical)	1.6 oz (45g)
NEMA 3R,4X, & 12	Approved with use of ACC03.
cUL Recognition	cUL Recognized
Options	Please contact factory.

Dimensions: Inches (mm) cUL Recognized ROHS Compliant

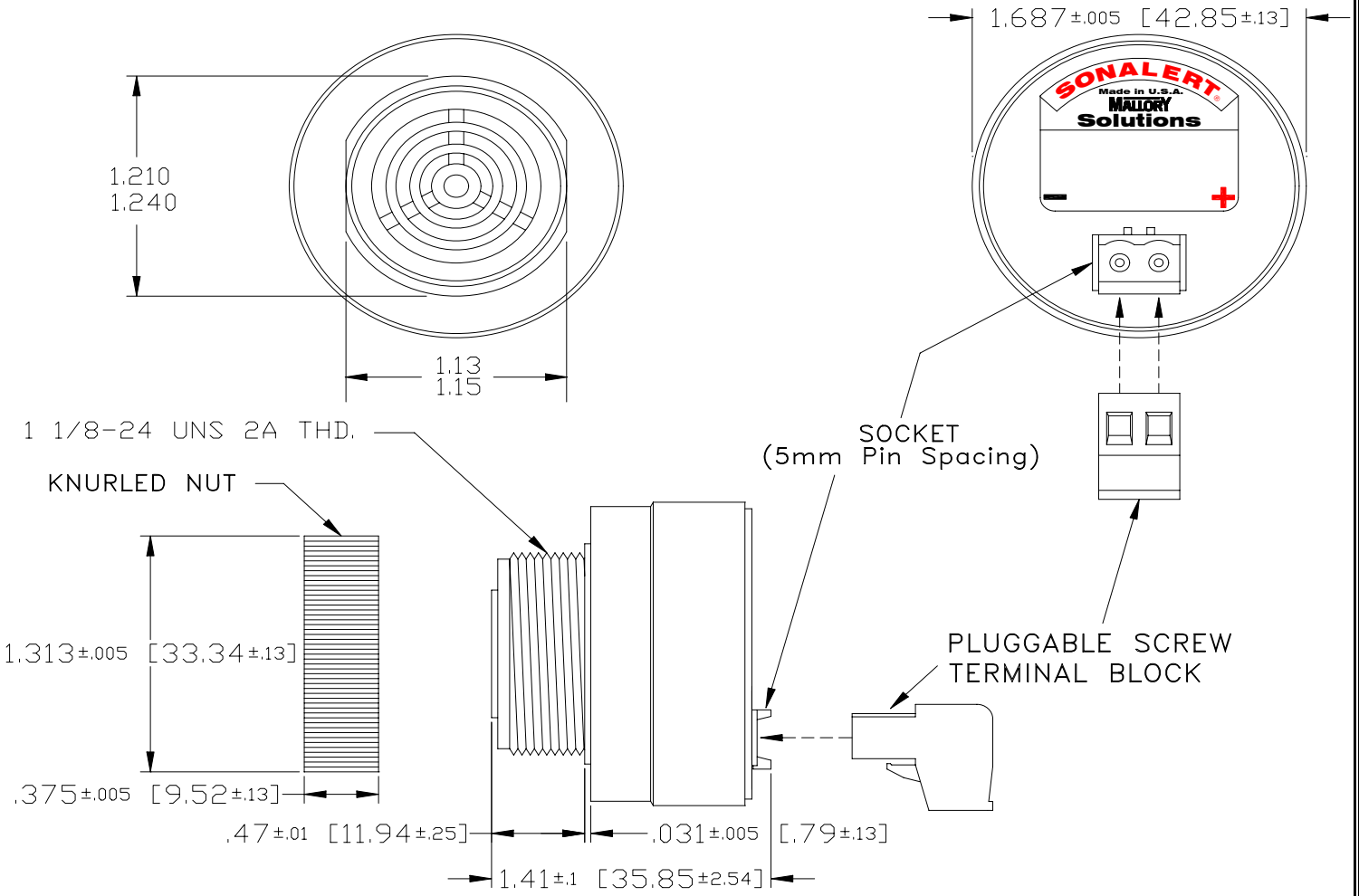

4411 South High School Road, Indianapolis, Indiana 46241 U.S.A · Phone: (317) 612-1000 Fax: (317) 612-1010 · www.mallory-sonalert.com