| Mallory Sonalert Products,Inc. | Part #: SCE048SA2CT1B |
|---|---|
| **Sales Outline Drawing** | Revision: **A** |

## Specifications:

| | |
|---|---|
| Sound Level Category | Soft |
| Mode of Operation | Continuous |
| Voltage Rating | 28 to 48 VAC |
| Frequency | 2000 ± 500 Hz |
| Loudness @ 2 FT | 65 to 75 dB(A) Typ. |
| Current Draw | 40mA MAX |
| Housing Material | 6/6 Nylon, Color: Black |
| Storage Temperature | -40° to +85° C |
| Operating Temperature | -40° to +85° C |
| Panel Mounting | Recommended hole size is 1.25"(31.75mm). Thread front will fit standard 30mm(1.181") hole. |
| Knurled Nut | Used to attach part to panel. The max recommended torque is 10 in-lbs. |
| Weight (Typical) | 1.6 oz (45g) |
| NEMA 3R,4X, & 12 | Approved with use of ACC03. |
| cUL Recognition | Supply voltage shall employ Transient Voltage Surge Suppression. |
| Options | Please contact factory. |

## Dimensions: Inches (mm) cUL Recognized ROHS Compliant

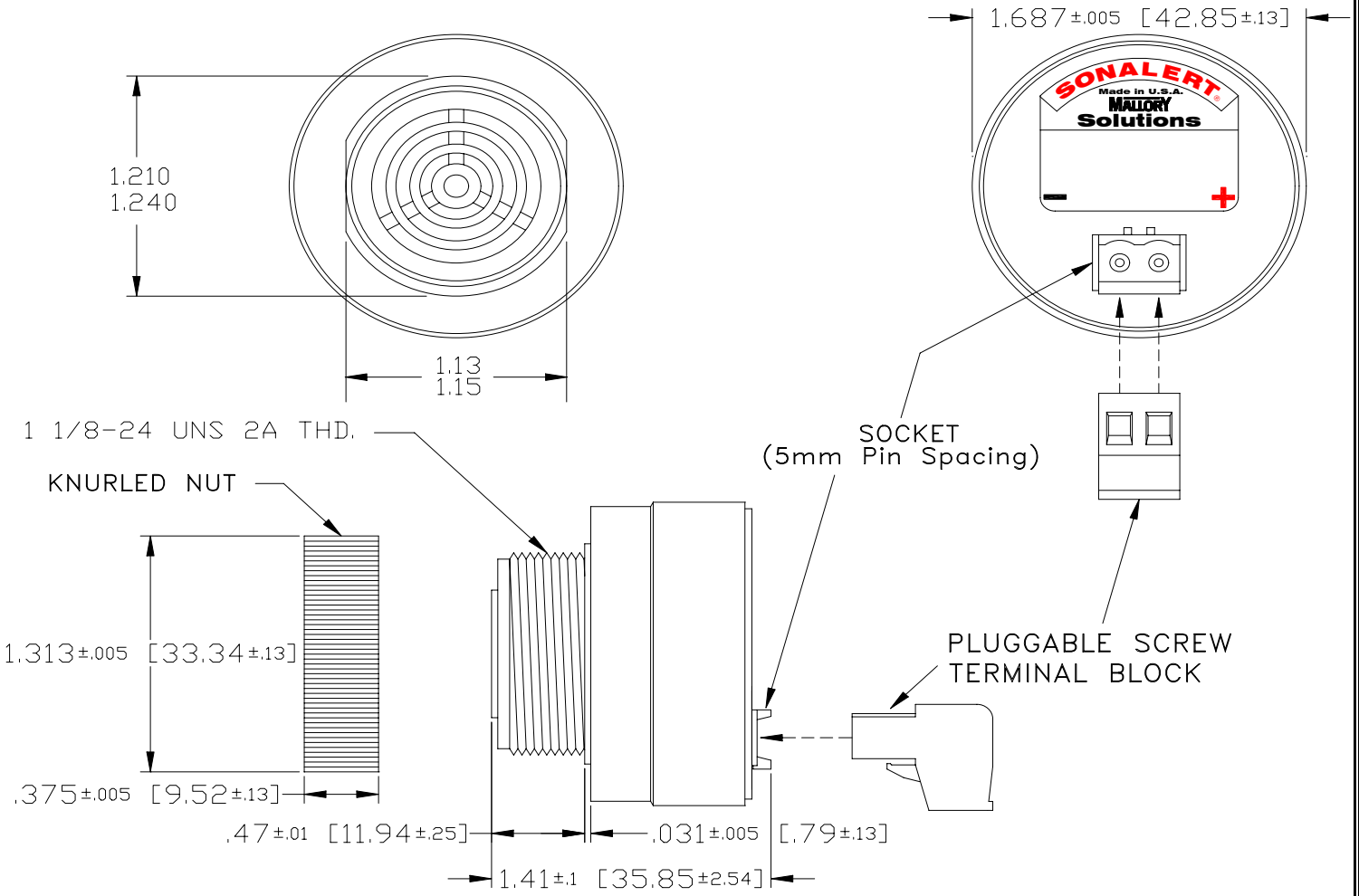


4411 South High School Road, Indianapolis, Indiana 46241 U.S.A · Phone: (317) 612-1000 Fax: (317) 612-1010 · www.mallory-sonalert.com