Alle Rechte vorbehalten/ *All rights reserved*

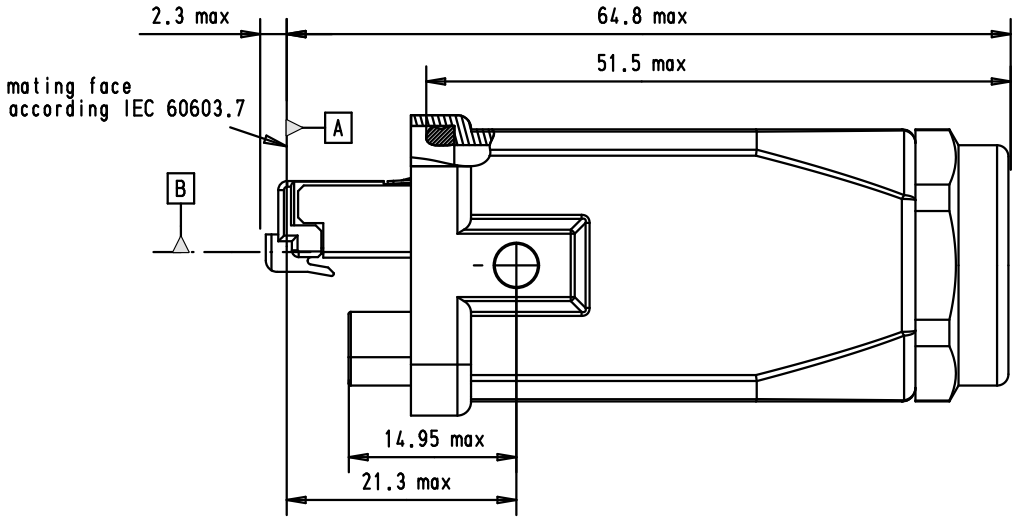

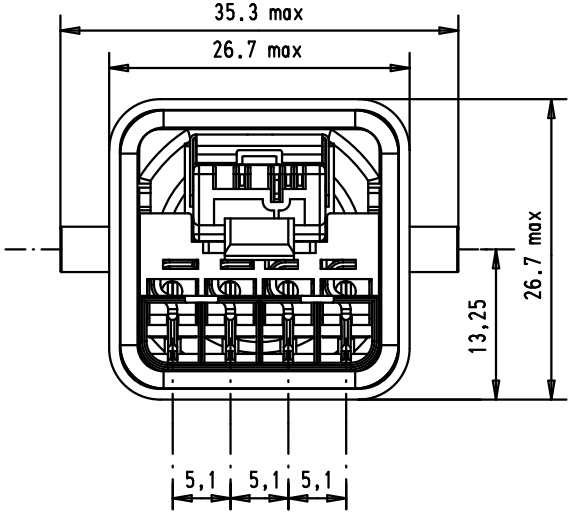

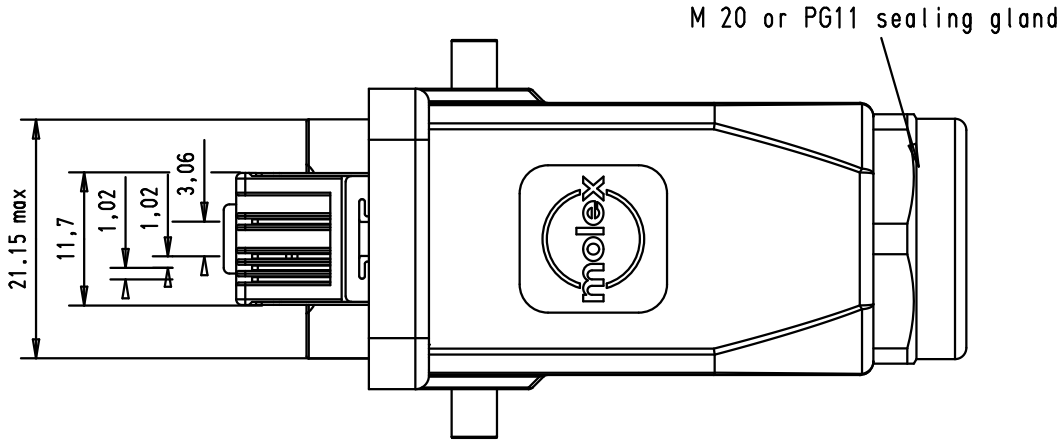

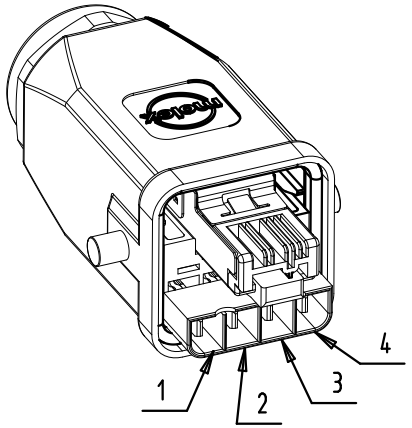

power contact	data contact	performance level
Ag:5µm over Ni	Au:1.27µm over Ni	1

Mod.	Dat.	Name		Dat.	Name
			Detail.	19/04/02	S.H
36289	22/02/12	SD	Insp.	22/02/12	JMV
31556	09/oct/03	S.H	Stand.		
31529	22/07/03	S.H			
31350	16/05/02	S.H			

All Dim. in mm
Orig. Size DIN A 4

HARTING ELEKTRONIK
F-95972 Paris

RJ INDUSTRIAL
IP67 Hybrid Plug
4 data - 4 power (16 Amps at 20°C)

Maßstab/ *Scale* 1.5:1

TB 09 45 125 1300

Sub. RP 090177/208

Blatt/ *Page* /