Alle Rechte vorbehalten/ *All rights reserved*

Material:

Shielding: Copper alloy with nickel plating
Housing: PBT, UL-94-V0, black
Insert: PBT, UL-94-V0, black
Contact: -Phosphor bronze, selective gold plating over nickel in contact area
-Tin plating over nickel in solder area

Electrical and mechanical datas:

RF performance Category 5 acc. ISO IEC 11 801:2002
Temperature: -20°C to 70°C
Min 500 mating cycles

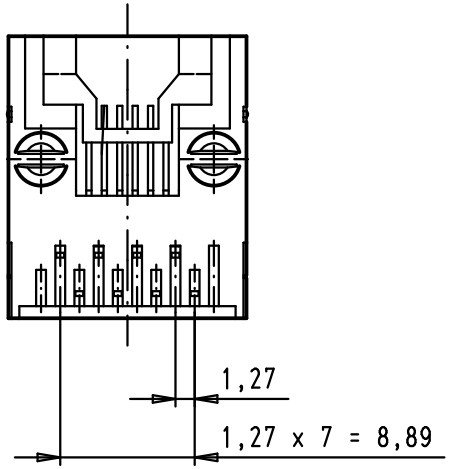

PCB layout, component side

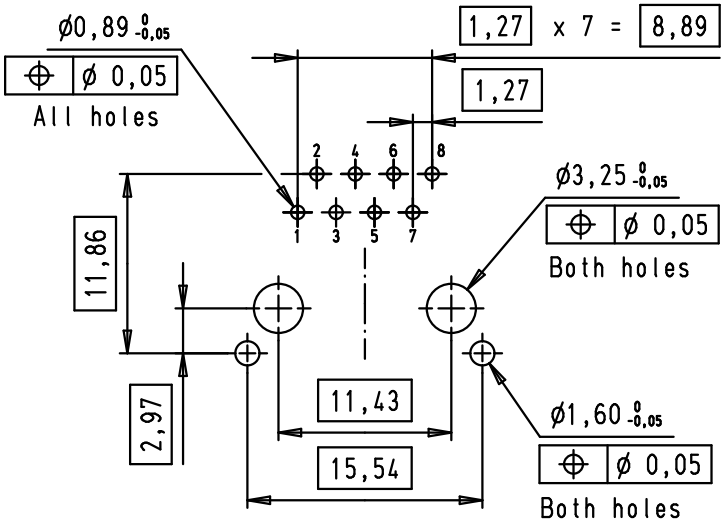

A-A

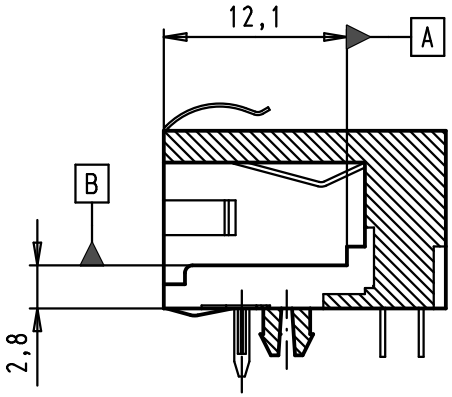

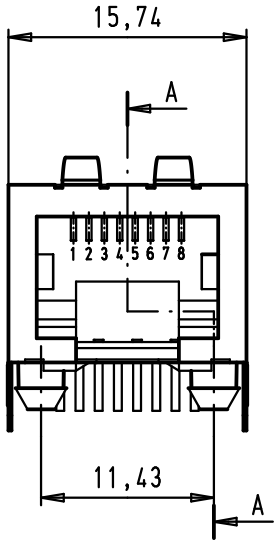

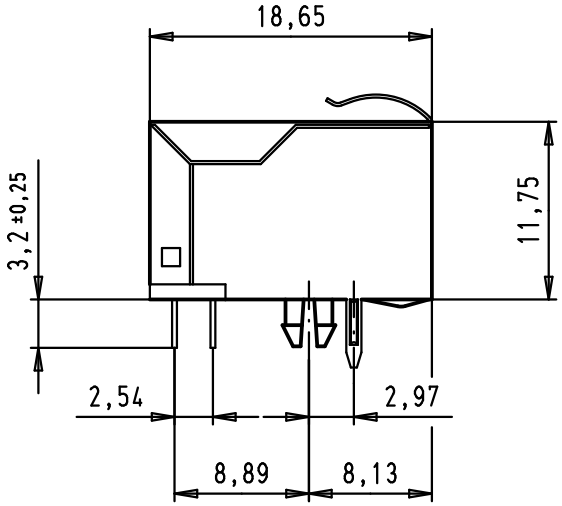

				Dat.	Name
			Detail.	01/04/04	JH
35070	06/08/08	PK	Insp.		
34885	21/02/08	LP	Stand.		
32489	16/12/04	JFB			
31884	01/04/04	JH			
Mod.	Dat.	Name			

All Dim. in mm
Orig. Size DIN A 4

Data 3a / Push Pull Modular
RJ 45 Jack
with 8 signal solder pins
and 2 grounding solder pins

Maßstab/ *Scale* 2:1

HARTING EURL
F-95972 Paris

TB 09 45 551 1101

Sub.

Blatt/ *Page* 1/1