Alle Rechte vorbehalten/ *All rights reserved*

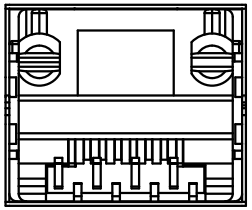

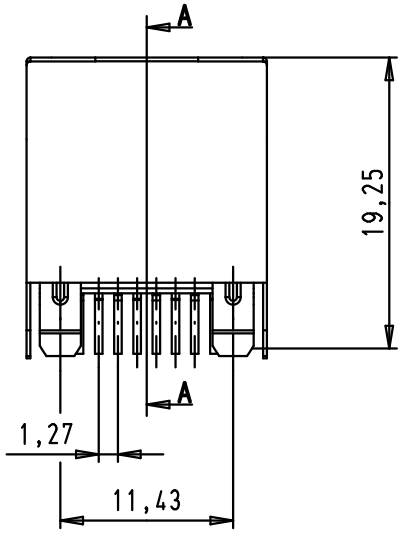


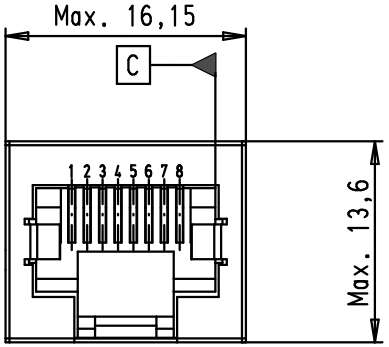


## A-A

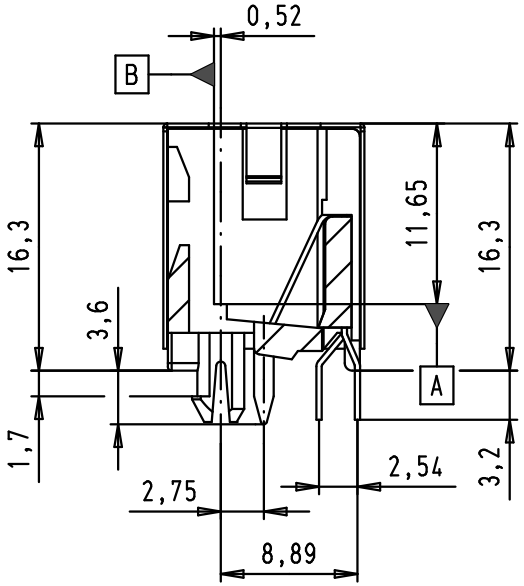


PCB layout, component side

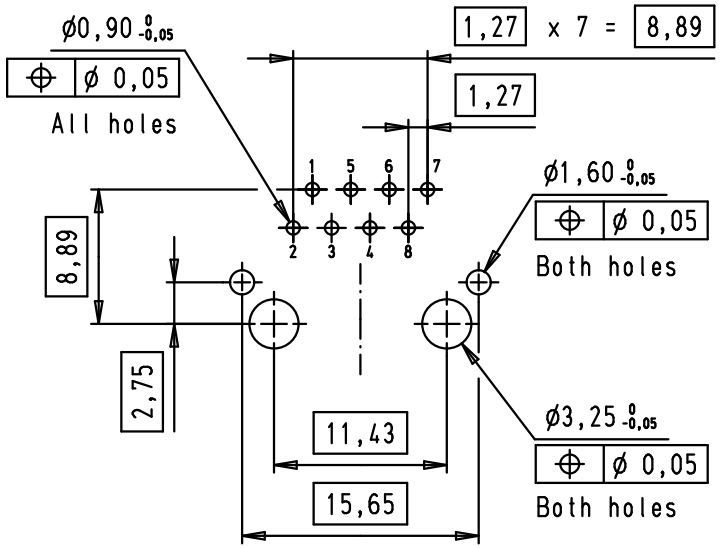


Material:

Shielding: Copper alloy with nickel plating
Housing: PBT, UL-94-V0, black
Insert: PBT, UL-94-V0, black
Contact: -Phosphor bronze, selective gold plating over nickel in contact area
-Tin plating over nickel in solder area

Electrical and mechanical datas:

RF performance Category 5 acc. ISO IEC 11 81:2002
Temperature : -20°C to 70°C
Min 500 mating cycles

| | | | | Dat. | Name |
|---|---|---|---|---|---|
| | | | Detail. | 09/04/08 | LP |
| | | | Insp. | 09/01/12 | JB |
| 36286 | 09/01/12 | SD | Stand. | | |
| 35070 | 06/08/08 | PK | | | |
| 34910 | 09/04/08 | LP | | | |
| Mod. | Dat. | Name | | | |

All Dim. in mm
Orig. Size DIN A 4

HARTING RJ industrial verical
RJ45 jack THT
with 8 signal terminations
and 2 grounding terminations

Maßstab/ *Scale* 2:1

HARTING EURL
F-95972 Paris

TB 09 45 551 1103

Sub. MB 00 45 0139

Blatt/ *Page* 1/1