Alle Rechte vorbehalten/ *All rights reserved*

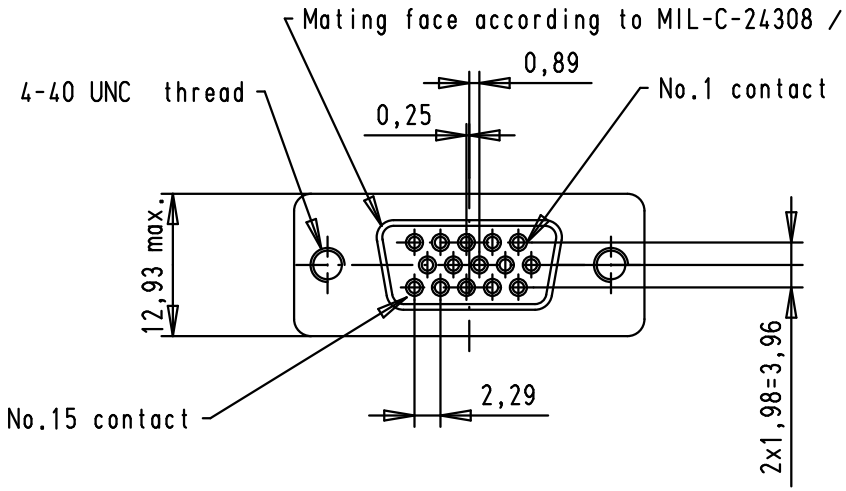

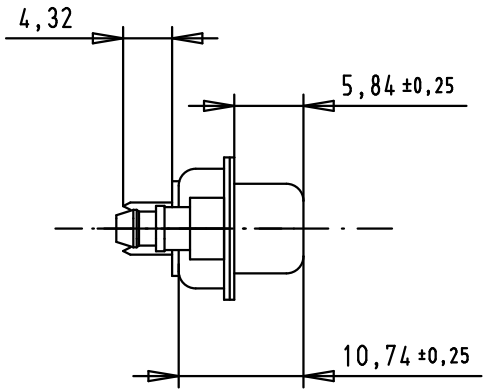

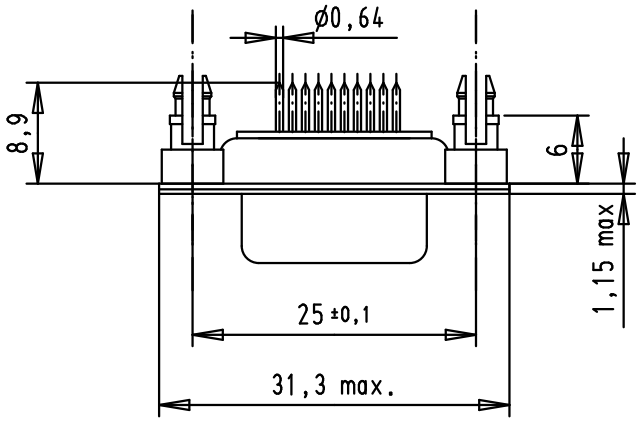

Printed board layout, component side
PCB thickness 1,6mm

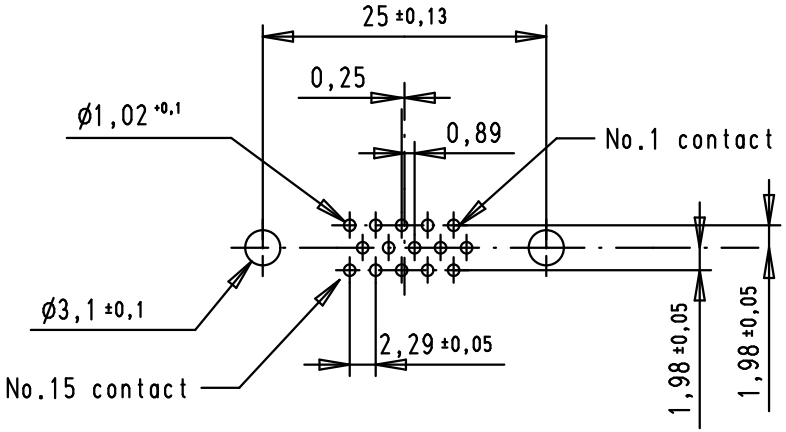

09561515512	0.76 µm Au
09561517512	3
Part number	Performance level

				Dat.	Name
			Detail.	16-OCT-02	S.H.
36183	13/10/10	BH	Insp.		
32735	18/03/05	AL	Stand.		
32326	03/01/05	TR			
31095	16-OCT-02	S.H.			
Mod.	Dat.	Name			

All Dim. in mm
Orig. Size DIN A 4

HARTING EURL
F-95972 Paris

Dsub, 15 poles, female, straight solder pins, board locks

Maßstab/ *Scale* 1.5:1

TB 0956151x512

Sub.

Blatt/ *Page* 1/1