Alle Rechte vorbehalten/ *All rights reserved*

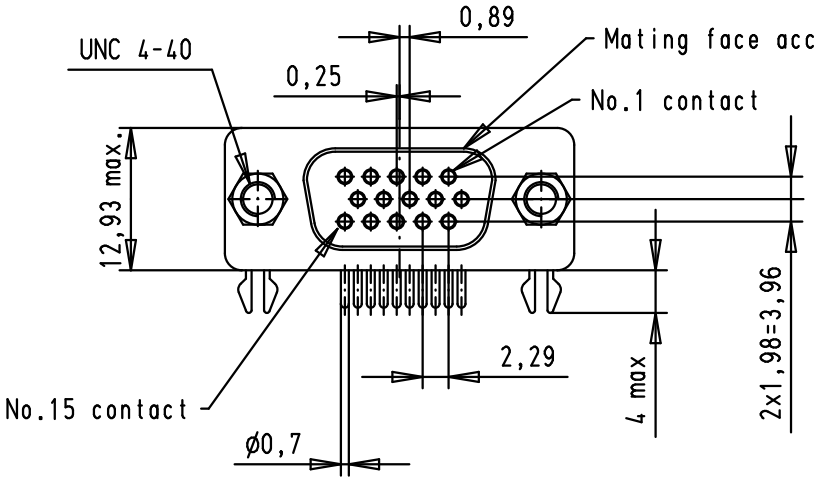

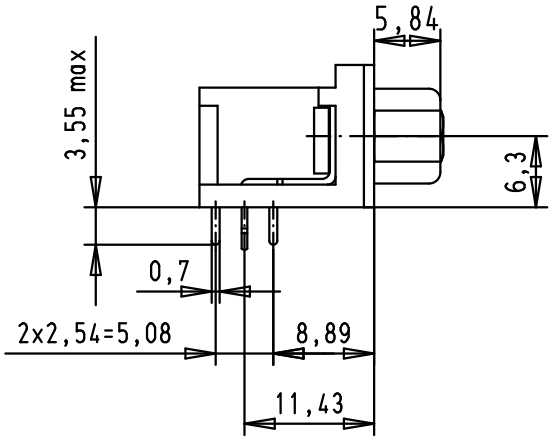

Printed board layout, component side
PCB thickness 1,6mm

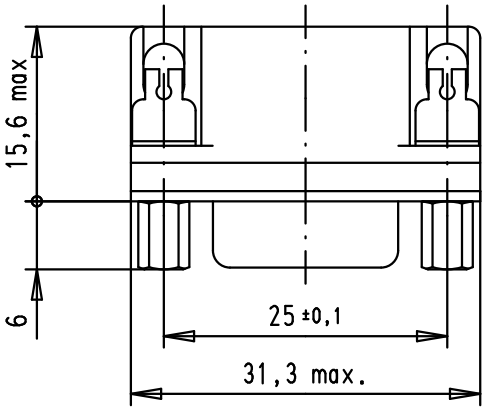

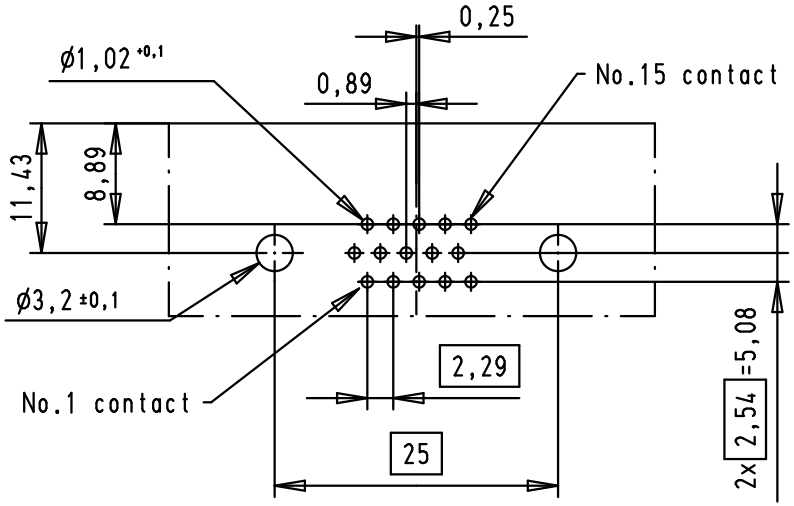

							Dat.	Name	All Dim. in mm Orig. Size DIN A 4	Dsub, 15 poles, female, angled solder pins, screw locks, board locks	Maßstab/ *Scale*
						Detail.	16-SEP-02	CV			1.5:1
			36181	12-OCT-10	BH	Insp.					
			EC02035	06-JUL-10	SC	Stand.					
09561525613	S4		31352	16-OCT-02	*S.H.*	HARTING EURL F-95972 Paris				TB 0956152x613	Blatt/ *Page* 1/1
09561527613	PL3		31064	16-SEP-02	CV						
Part number	Performance level		Mod.	Dat.	Name					Sub.	