Alle Rechte vorbehalten/ *All rights reserved*

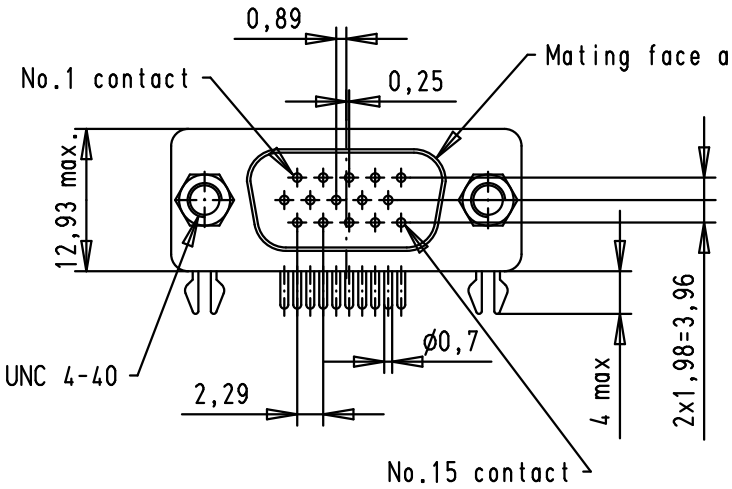

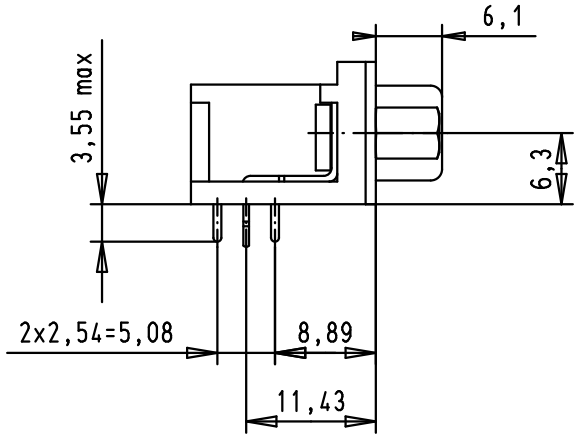

Printed board layout, component side
PCB thickness 1,6mm

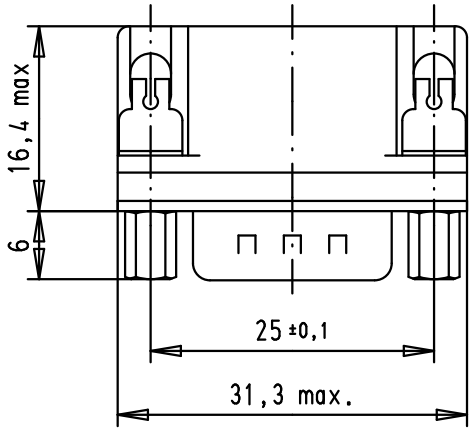

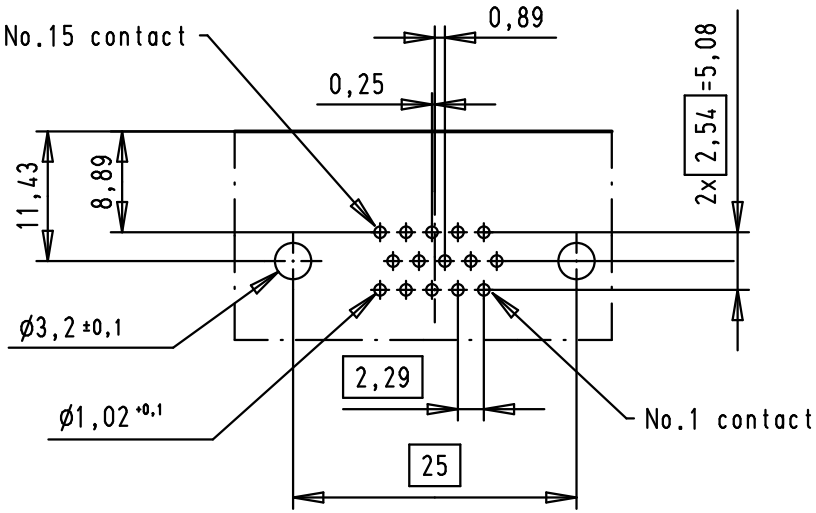

							Dat.	Name			Maßstab/ *Scale*
										Dsub, 15 poles, male, angled solder pins screw locks, board locks, shell with dimples	
			36181	11/10/10	*BH*	Detail.	16-SEP-02	CV	All Dim. in mm Orig. Size DIN A 4		1.5:1
			EC02035	07/07/10	*SC*	Insp.					
			31485	16-04-03	*S.H.*	Stand.					
09561625813	S4		31352	16-OCT-02	*S.H.*	HARTING EURL F-95972 Paris				TB 09 56 162 x813	Blatt/*Page* 1/1
09561627813	PL3		31064	16-SEP-02	CV						
Part number	Performance level		Mod.	Dat.	Name					Sub.	