Alle Rechte vorbehalten/ *All rights reserved*

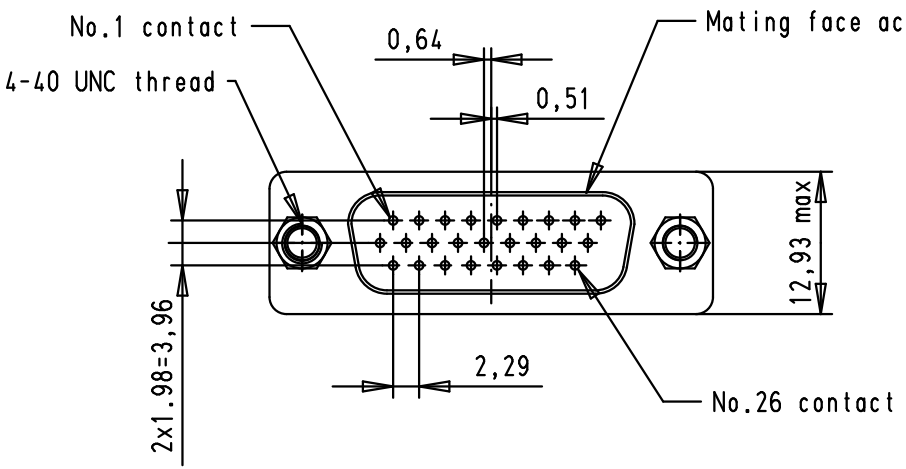

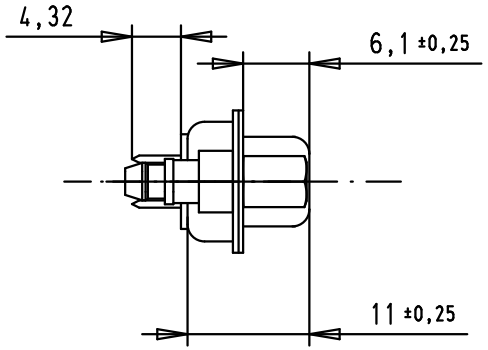

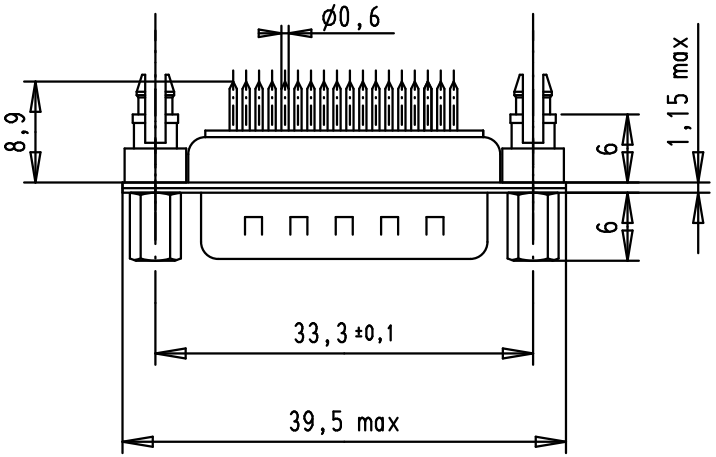

Printed board layout, component side
PCB thickness 1,6mm

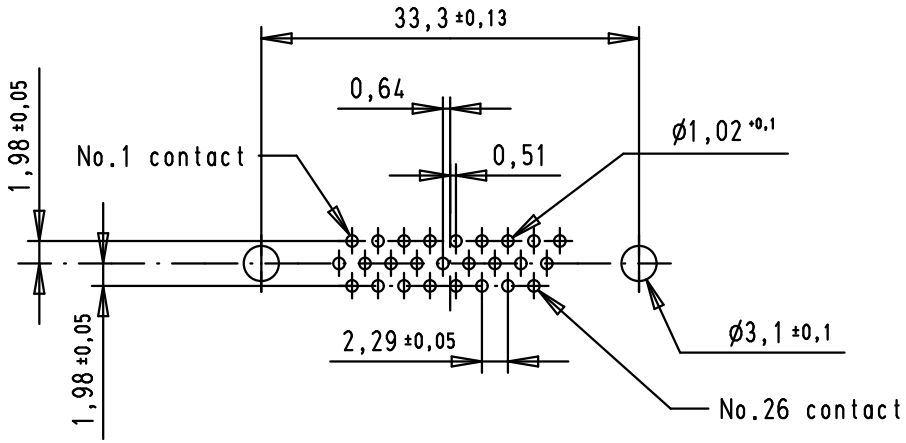

09562615713	0.76 µm Au
09562617713	3
Part number	Performance level

				Dat.	Name
36182	13/10/10	BH	Detail.	03/06/03	*S.H.*
32735	18/03/05	AL	Insp.		
32326	03/01/05	TR	Stand.		
31874	05/03/04	*A.C.*			
31503	03/06/03	*S.H.*			
Mod.	Dat.	Name			

All Dim. in mm
Orig. Size DIN A 4

HARTING EURL
F-95972 Paris

Dsub, 26 poles, male, straight solder pins, board locks and screw locks shell with dimples

Maßstab/ *Scale* 1.5:1

TB 0956261x713

Sub.

Blatt/ *Page* 1/1