Alle Rechte vorbehalten/ *All rights reserved*

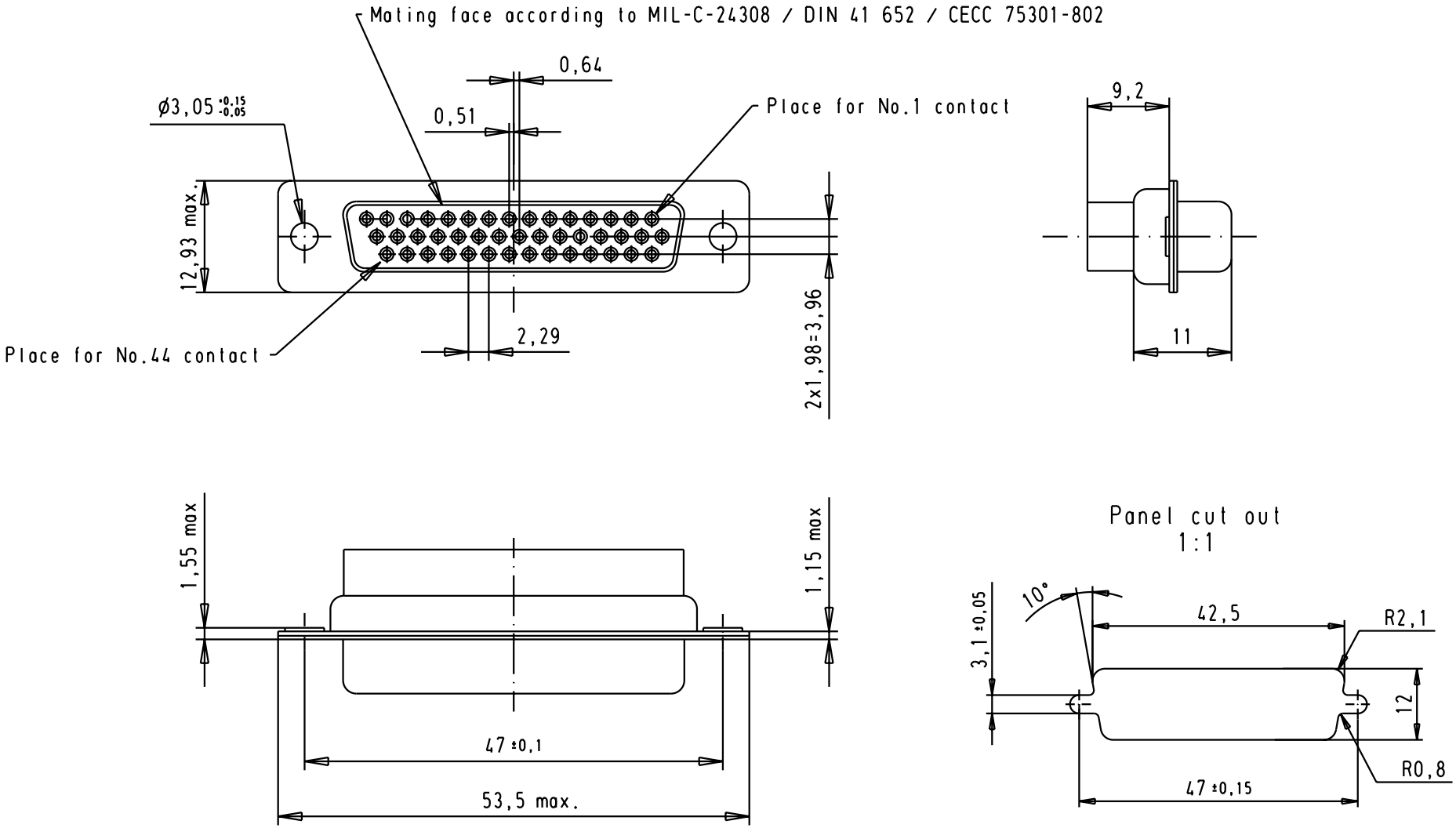

				Dat.	Name			Maßstab/ *Scale*
			Detail.	16-SEP-02	CV	All Dim. in mm Orig. Size DIN A 4	D-Sub, female, high density, 44 poles, for crimp contacts	1:5:1
			Insp.					
			Stand.					
31064	16-SEP-02	CV	HARTING EURL F-95972 Paris				TB 09563004701	Blatt/ *Page* 1
Mod.	Dat.	Name					Sub.	