Alle Rechte vorbehalten/ *All rights reserved*

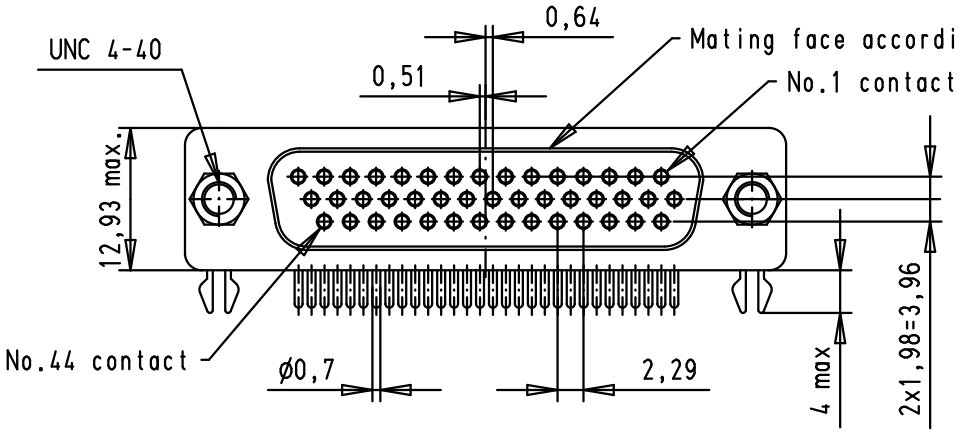

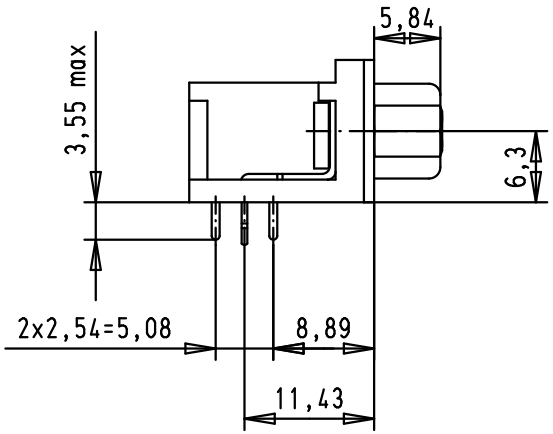

Printed board layout, component side
PCB thickness 1,6mm

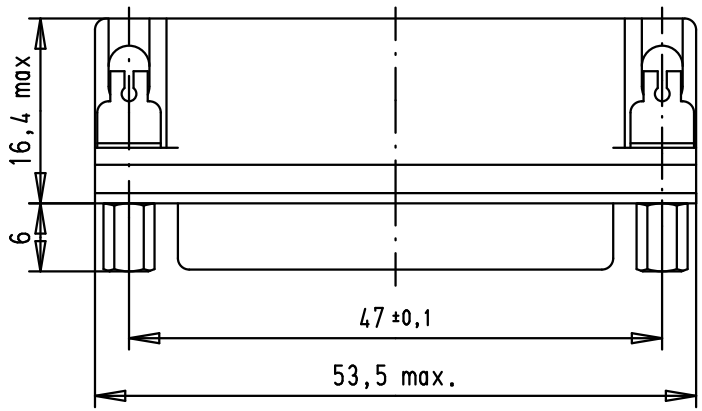

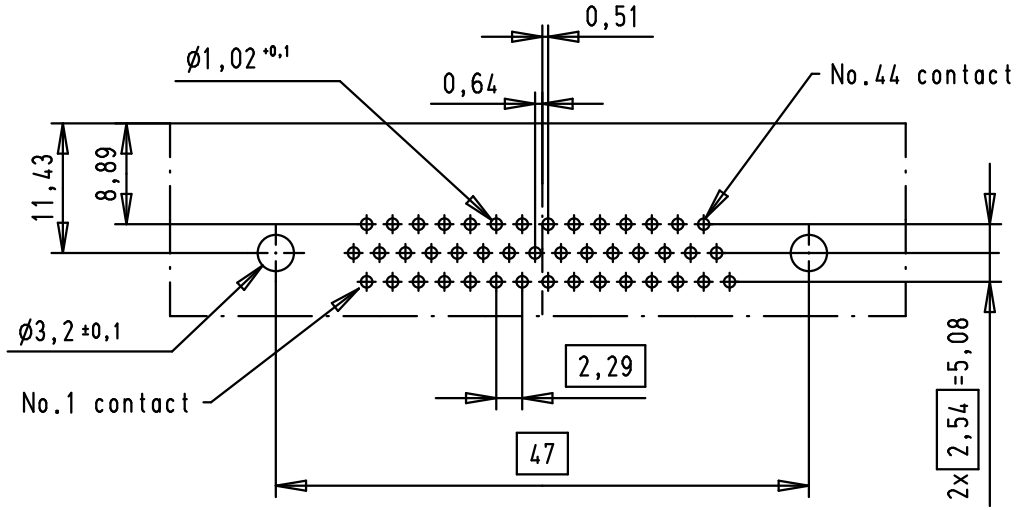

							Dat.	Name		Dsub, 44 poles, female, angled solder pins, screw locks, board locks	Maßstab/ *Scale*
			36181	12-10-10	BH	Detail.	16-SEP-02	CV	All Dim. in mm Orig. Size DIN A 4		1.5:1
			EC02035	07-07-10	SC	Insp.					
			31485	16-04-03	*S.H.*	Stand.					
09563525613	S4		31352	16-OCT-02	*S.H.*	HARTING EURL F-95972 Paris				TB 09 56 352 x613	Blatt/ *Page* 1/1
09563527613	PL3		31064	16-SEP-02	CV						
Part number	Performance level		Mod.	Dat.	Name					Sub.	