Alle Rechte vorbehalten/ *All rights reserved*

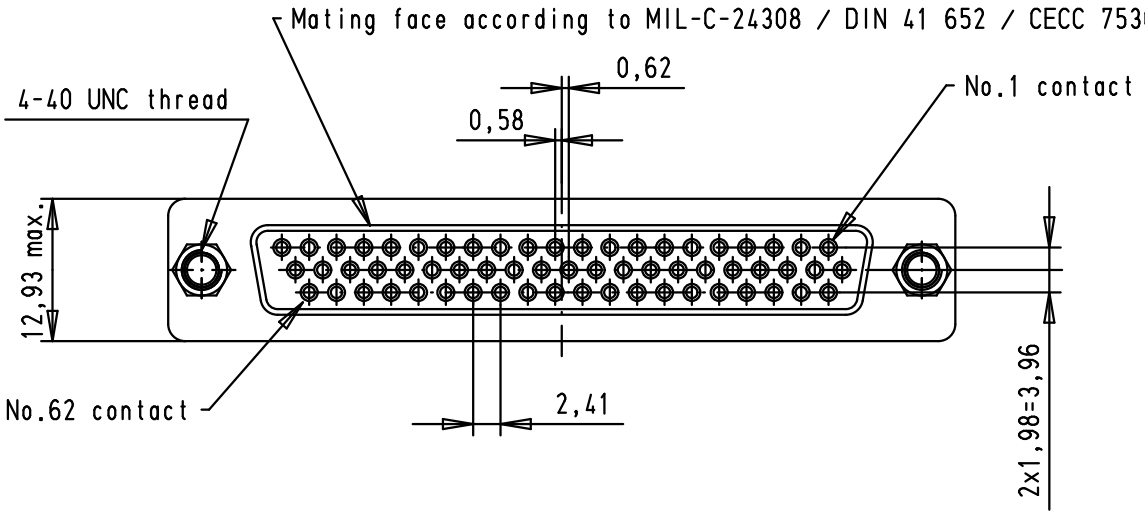

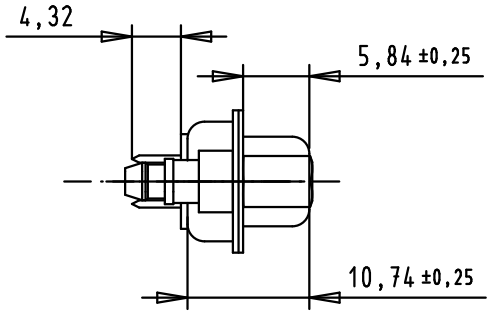

Printed board layout, component side
PCB thickness 1,6mm

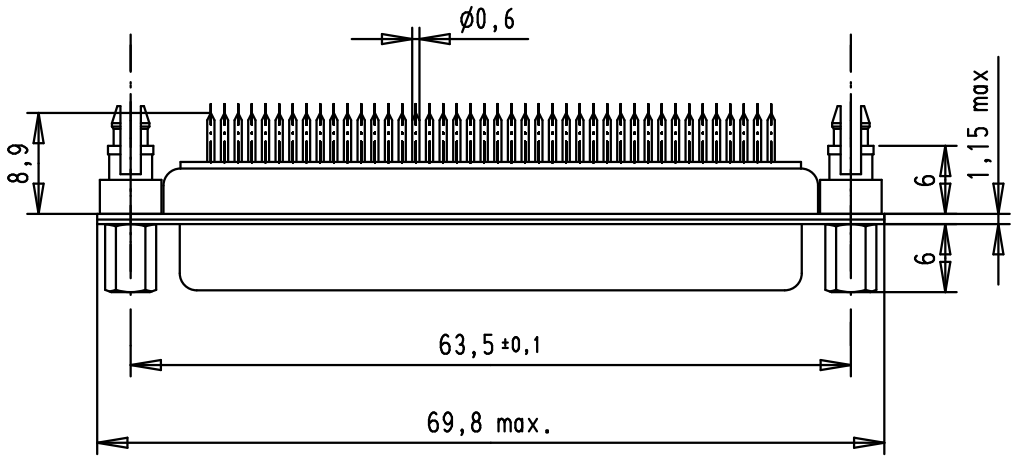

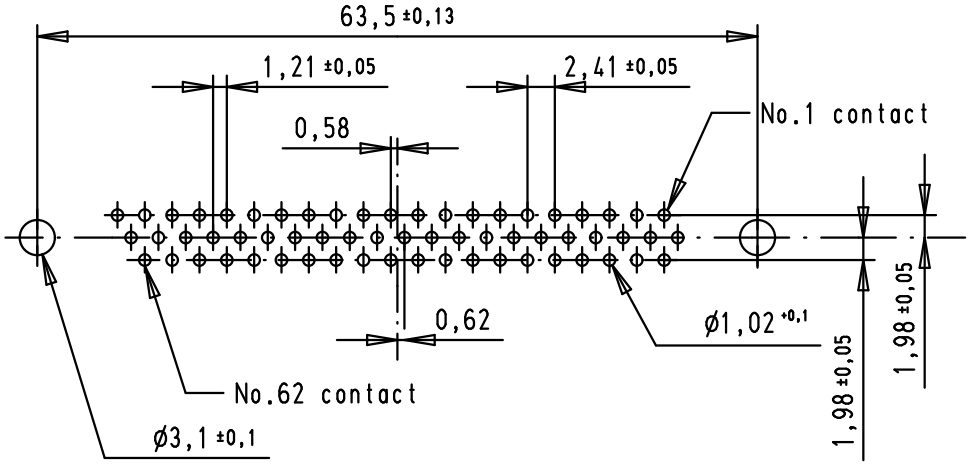

09564515513	0.76 µm Au
09564517513	3
Part number	Performance level

36183	13/10/10	BH
32735	18/03/05	AL
32326	03/01/05	TR
31503	3-06-03	CV
Mod.	Dat.	Name

	Dat.	Name
Detail.	3-jun-03	SH
Insp.		
Stand.		

All Dim. in mm
Orig. Size DIN A 4

HARTING EURL
F-95972 Paris

Dsub, 62 poles, female, straight solder pins, board locks, screw locks

Maßstab/ *Scale* 1.5:1

TB 0956451x513

Sub.

Blatt/ *Page* 1/1